Bf 110G-4

eduard

1/72 Scale Plastic Model Kit

item # 7465

WEEKEND edition

The Messerschmitt Bf 110 soldiered throughout the WWII as a fighter, fighter-bomber or night fighter. In the latter role, it proved its worth even at the very end of the war.

It was in 1934 when the Reich Ministry of Aviation (RLM, Reichsluftfahrtministerium) issued a request for a new twin-engine heavy fighter capable of successful dogfight with single-engine fighters. Apart of the long range and high speed the heavy armament was also to be an advantage of the new aircraft. Hermann Göring, the Reich Aviation Minister, was the "heavy weight" behind the concept and strong proponent of the new Kampfzerstörer (Combat Destroyer). The concept was intended to overcome troubles the designers were running into with first generation of monoplane designs as these fighters usually lacked range and power.
Thus, the RLM requested twin-engine, three-seat aircraft of all -metal design with internal bomb bay. Three manufacturers responded with their design: Focke-Wulf, Henschel and BFW (i.e., Bayerische Flugzeugwerke). The latter, which was to become Messerschmitt, defeated its opponents and was given funds to build three prototypes. Messerschmitt decided to omit the internal bomb bay in change for even more firepower than requested and this proved to be wise decision, as the ministry changed its mind (partly under pressure from Ernst Udet) about the internal bomb load.

From A to G

On May 12, 1936, Rudolf Opitz, the BfW company test pilot, flew the Bf 110 at Augsburg for the first time. It was powered by two DB 600A engines. Although the Bf 110 was not as maneuverable as desired, it was faster than requested and even faster than Bf 109B-1 single seat fighter. Thanks to it the order for four pre-production Bf 110A-0 units was placed with first of them delivered in January 1937 and after comparison with Fw 57 and Hs 124 competitors it was ordered for serial production.
Due to the troubles with the DB 600 engine supplies, the Jumo 210B units had to be installed into early Bf 110s, leaving them underpowered with top speed just 268 mph (431 km/h). More to it, the armament was limited to four MG 17 7.92 mm machine guns in the nose. The more powerful Jumo 210G developing 515 kW (44 kW more to 210B unit) was used for the Bf 110B with three versions. The B-1 was first to finally get two 20 mm MG FF cannons, while B-2 was reconnaissance version fitted with camera and the B-3 was used as a trainer.
Just 45 of all Bf 110Bs were manufactured as the design team reworked the engine nacelles to adapt DB 601B-1 engines, as they became available in late 1938. The top speed improved to 336 mph (541 km/h) with the resulting Bf 110C version.
With the Bf 110D the designers concentrated on range increase. The D-1 thus got the 277 gal (1,050 l) conformal tank under the belly of the fuselage with large cover. Also, two 238 gal (900 l) external drop underwing tanks were adopted, increasing the total fuel capacity to 1,088 gal (4,120 l). But the added drag of the early "dachshund's" belly was too high to allow serial production. The big tank was only used after the improvement of the shape as Bf 110D-1/R1 whereas the D-1/R2 was equipped with two drop tanks. Later D-2 and D-3 versions retained the twin underwing 900 l drop tank capability, using multipurpose ordnance racks capable of holding either drop tanks or bombs. The development than proceeded with the fighter-bomber E version and Bf 110F, which featured new DB 601F engines capable to deliver 1,350 PS (993 kW). More power allowed armor upgrade and strengthening the airframe without performance loss. The E version was considered best among all the Bf 110s. It was fully aerobatic and responsive, although not as fast as the Bf 109. Eventually 512 Bf 110F models were completed between December 1941 and December 1942 including the first night fighter, the Bf 110F-4.

In combat

The Bf 110 served with considerable success in early campaigns of WWII until the Battle of Britain, where all its shortcomings became more apparent when facing Hurricanes and Spitfires. The main weakness of the Bf 110 was its worse maneuverability, which was fully exploited by the RAF fighters. High losses of the Bf 110s during their day escort sorties forced Luftwaffe to change the tactics and scenarios when using this aircraft. Apart of this letdown, there were still tasks in which the Bf 110 would serve well when deployed properly. It was used as an air superiority fighter and fighter-bomber in Africa, Balkan, Mediterranean and on Eastern Front. It also developed into formidable night fighter with the onboard radar for searching the enemy bombers. Most of the German night fighter aces flew Bf 110s for at least part of their career.
Early variants of Bf 110 were armed with two MG FF 20 mm cannons and four 7.92 mm (.312 in) MG 17 machine guns in the nose, while single 7.92 mm (.312 in) MG 15 machine gun was rear firing for self-defensive fire. Later variants would replace the MG FFs with 15 mm MG 151s and the rear gunner's station would be armed with the twin-barreled MG 81Z (7,92 mm). Some Bf 110Gs got the 30 mm Mk 108 cannons instead of MG 17s.

This kit: Bf 110G-4

The Bf 110F version would probably have been the last evolutionary stage of a design which was getting obsolete at the time, if the successor, the Me 210, had been successful. But the opposite was true. The Me 210 was a disappointment and so development of the Bf 110 continued. The new version, designated G, received DB 605B engines of up to 1,475 HP (1,085 kW) of power. It also sportet upgraded armament and underwent some aerodynamic changes. A number of field conversion kits (Rüstsätze) were developed, making the G version the most versatile of all the Bf 110s. The most numerous of all the subversions was the three -seat Bf 110G-4 night fighter equipped with the FuG 202/220 Lichtenstein radar combined in some cases with the upward-firing Schräge Music cannons. Usually these were two 20 mm MG FF guns, but MG 151/20 field installations of the same caliber or 30 mm MK 108 guns were also used. The Bf 110 G-2/R1 could even use a 37 mm BK 3.7 Bordkanone gun mounted in a conformal pod under fuselage. There were a number of combinations of radar antennae, Schräge Music arrangements and other technical improvements due to the aforementioned Rüstsätze as well as Umrüst-Bausätze kits and improvements. There were 2,293 of Bf 110G built between December 1942 and April 1945.

ATTENTION ✷ UPOZORNĚNÍ ✷ ACHTUNG ✷ ATTENTION ✷ 注意

Carefully read instruction sheet before assembling. When you use glue or paint, do not use near open flame and use in well ventilated room. Keep out of reach of small children. Children must not be allowed to suck any part, or pull vinyl bag over the head.

Před započetím stavby si pečlivě prostudujte stavební návod. Při používání barev a lepidel pracujte v dobre větrané místnosti. Lepidla ani barvy nepoužívejte v blízkosti otevřeného ohně. Model není určen malým dětem, mohlo by dojít k požití drobných dílů.

INSTRUCTION SIGNS ✷ INSTR. SYMBOLY ✷ INSTRUKTION SINNBILDEN ✷ SYMBOLES ✷ 記号の説明

OPTIONAL VOLBA | BEND OHNOUT | SAND BROUSIT | OPEN HOLE VYVRTAT OTVOR | SYMETRICAL ASSEMBLY SYMETRICKÁ MONTÁŽ | REMOVE ODŘÍZNOUT | REVERSE SIDE OTOČIT | APPLY EDUARD MASK AND PAINT POUŽÍT EDUARD MASK NABARVIT

PARTS ✷ DÍLY ✷ TEILE ✷ PIÈCES ✷ 部品

PLASTIC PARTS

A>

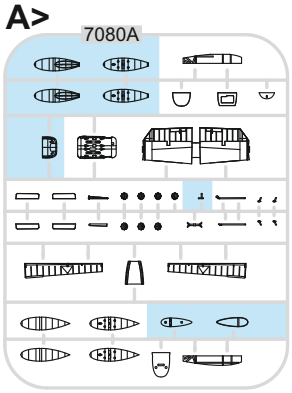

B>

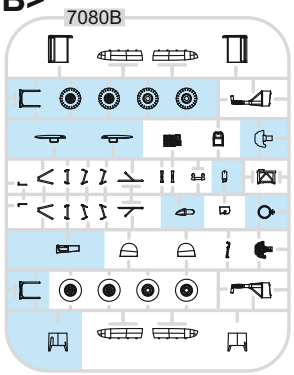

C>

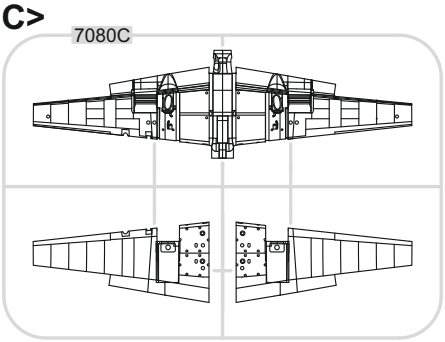

D>

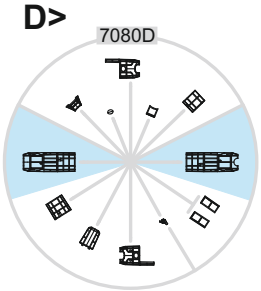

J>

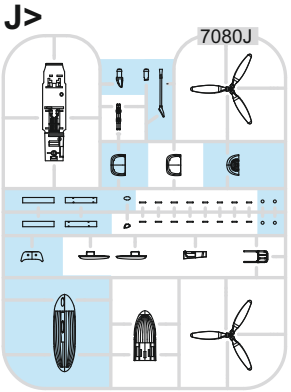

K>

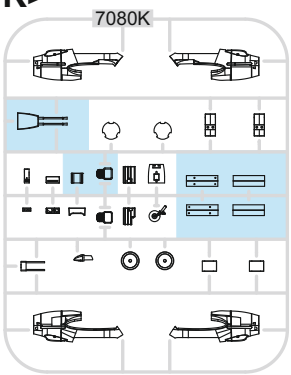

L>

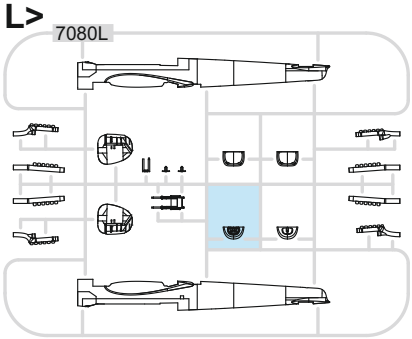

M>

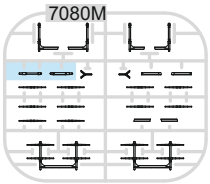

PE - PHOTO ETCHED DETAIL PARTS

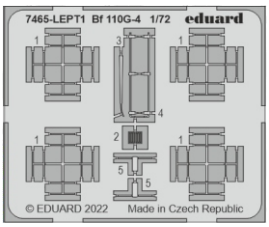

-Parts not for use. -Teile werden nicht verwendet. -Pièces à ne pas utiliser. -Tyto díly nepoužívejte při stavbě. - 使用しない部品

COLOURS ✷ BARVY ✷ FARBEN ✷ PEINTURE ✷ 色

GSi Creos (GUNZE)		MISSION MODELS	
AQUEOUS	Mr.COLOR	PAINTS	
H2	C2	MMP-047	BLACK
H11	C62	MMP-001	FLAT WHITE
H12	C33	MMP-047	FLAT BLACK
H37	C43		WOOD BROWN
H65	C18	MMP-088	RLM70 BLACK GREEN
H68	C36	MMP-049	RLM74 DARK GRAY
H69	C37	MMP-050	RLM75 GRAY
H70	C60	MMP-056	GRAY
H77	C137	MMP-040	TIRE BLACK
H85	C45		SAIL COLOR

GSi Creos (GUNZE)		MISSION MODELS	
AQUEOUS	Mr.COLOR	PAINTS	
H90	C47		CLEAR RED
H94	C138		CLEAR GREEN
H416	C116	MMP-089	RLM66 BLACK GRAY
H417	C117	MMP-051	RLM76 LIGHT BLUE
Mr.METAL COLOR		METALLICS	
MC214		MMM-001	DARK IRON
MC218		MMM-003	ALUMINIUM
Mr.COLOR SUPER METALLIC		METALLICS	
SM201		MMC-001	SUPER FINE SILVER

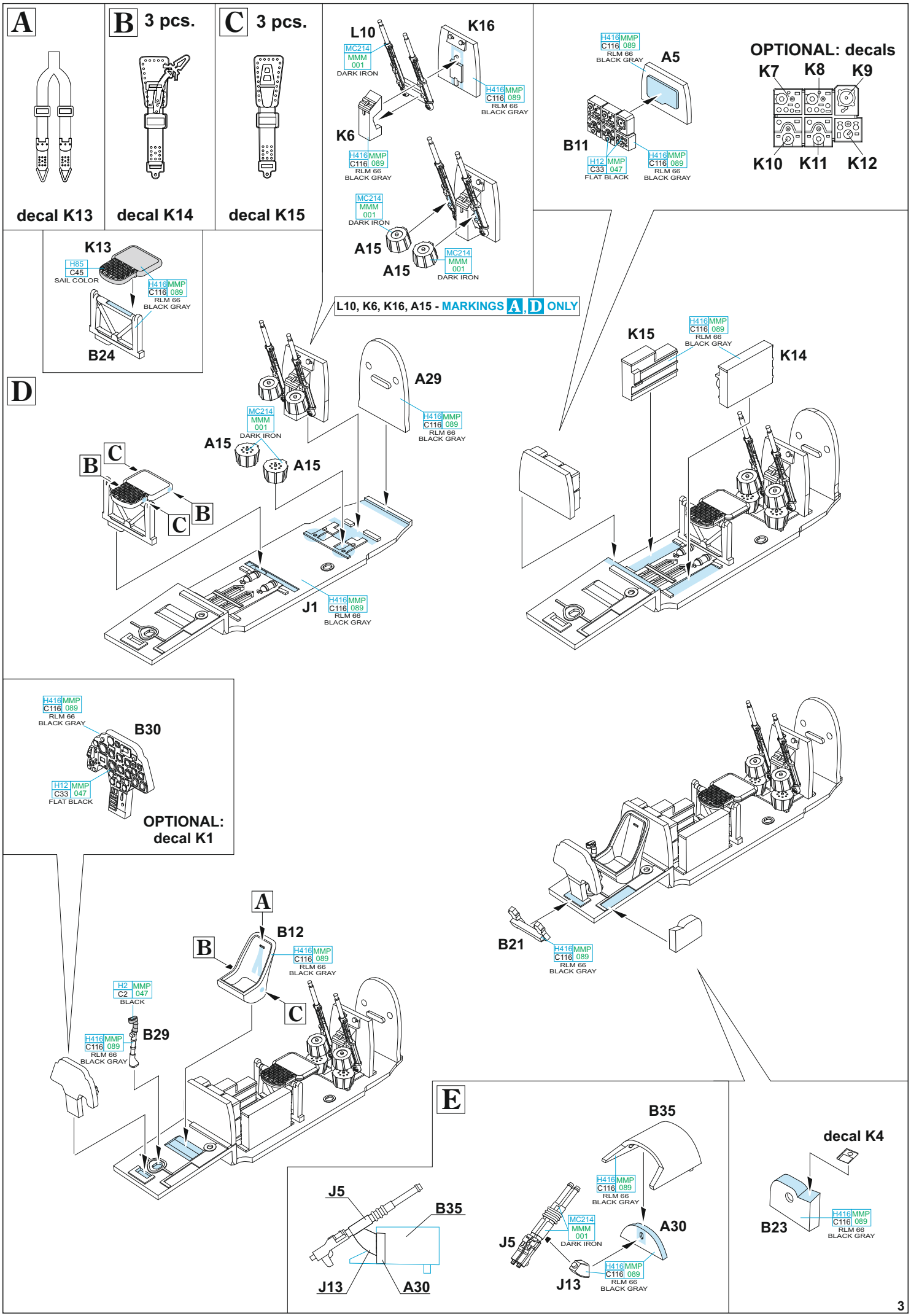
A
decal K13
B 3 pcs.
decal K14
C 3 pcs.
decal K15
L10
K16
MC214 MMM 001 DARK IRON
H416 MMP C116 089 RLM 66 BLACK GRAY
K6
A15
A15
L10, K6, K16, A15 - MARKINGS A, D ONLY
A5
B11
H12 MMP C33 047 FLAT BLACK
OPTIONAL: decals
K7
K8
K9
K10
K11
K12
K13
H85 C45 SAIL COLOR
B24
D
A29
J1
K15
K14
B30
OPTIONAL: decal K1
B12
B29
H2 MMP C2 047 BLACK
B21
E
B35
J5
J13
A30
decal K4
B23

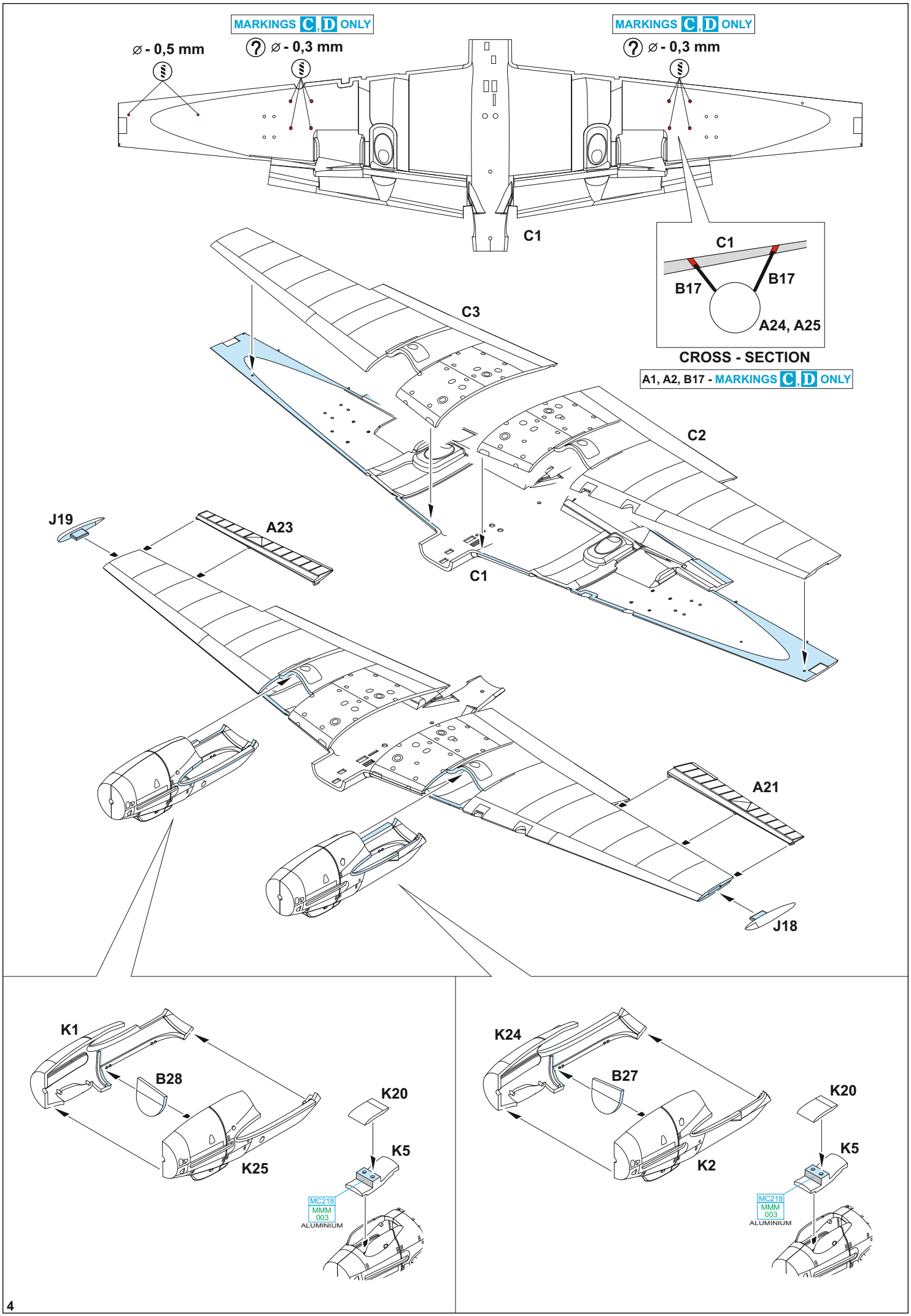
MARKINGS C, D ONLY
⌀ - 0,5 mm
⌀ - 0,3 mm
MARKINGS C, D ONLY
⌀ - 0,3 mm
C1
C1
B17
B17
A24, A25
CROSS - SECTION
A1, A2, B17 - MARKINGS C, D ONLY
C3
C2
J19
A23
C1
A21
J18
K1
B28
K25
K20
K5
MC218
MMM
003
ALUMINIUM
K24
B27
K2
K20
K5
MC218
MMM
003
ALUMINIUM

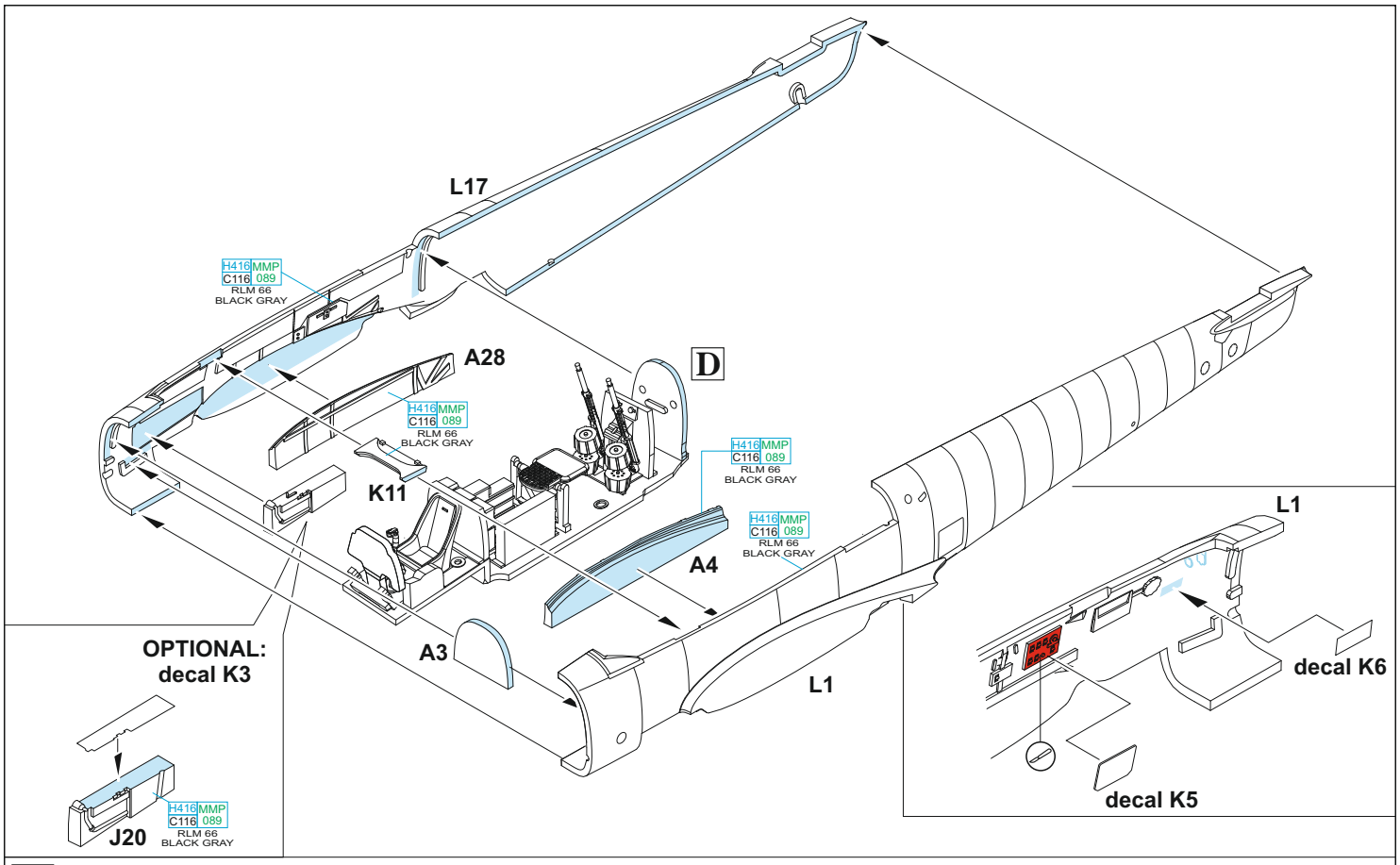
L17
H416 MMP
C116 089
RLM 66
BLACK GRAY
A28
D
K11
A4
A3
L1
OPTIONAL:
decal K3
J20
L1
decal K6
decal K5

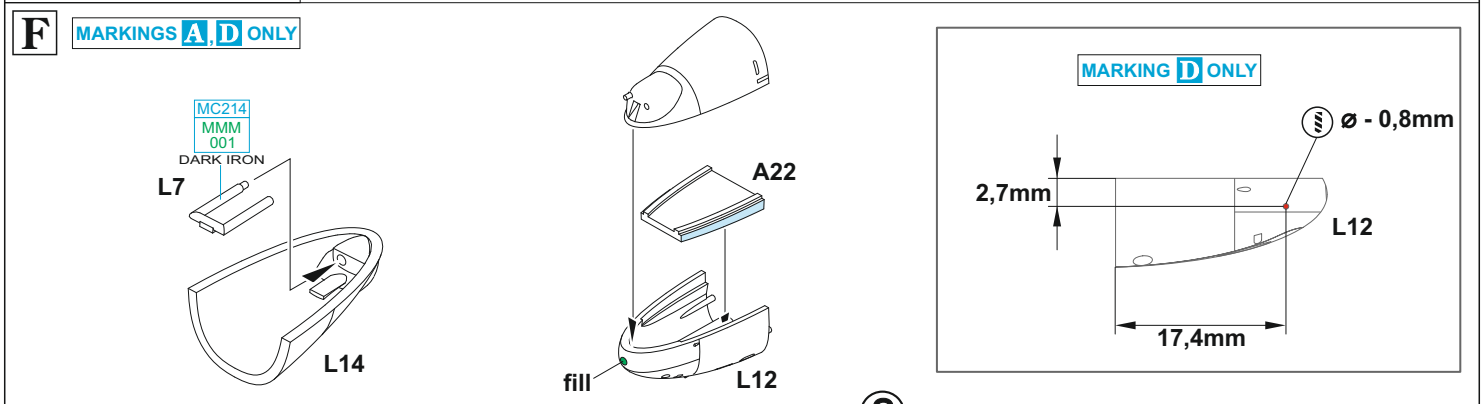
F
MARKINGS A, D ONLY
MC214
MMM
001
DARK IRON
L7
L14
A22
fill
L12
MARKING D ONLY
ø - 0,8mm
2,7mm
L12
17,4mm

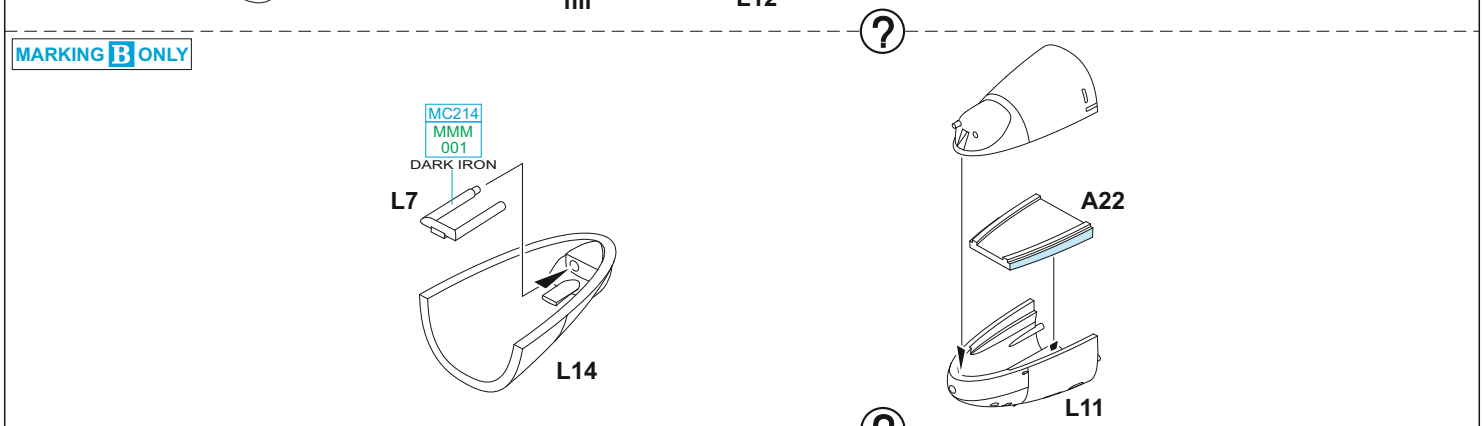
MARKING B ONLY
MC214
MMM
001
DARK IRON
L7
L14
A22
L11

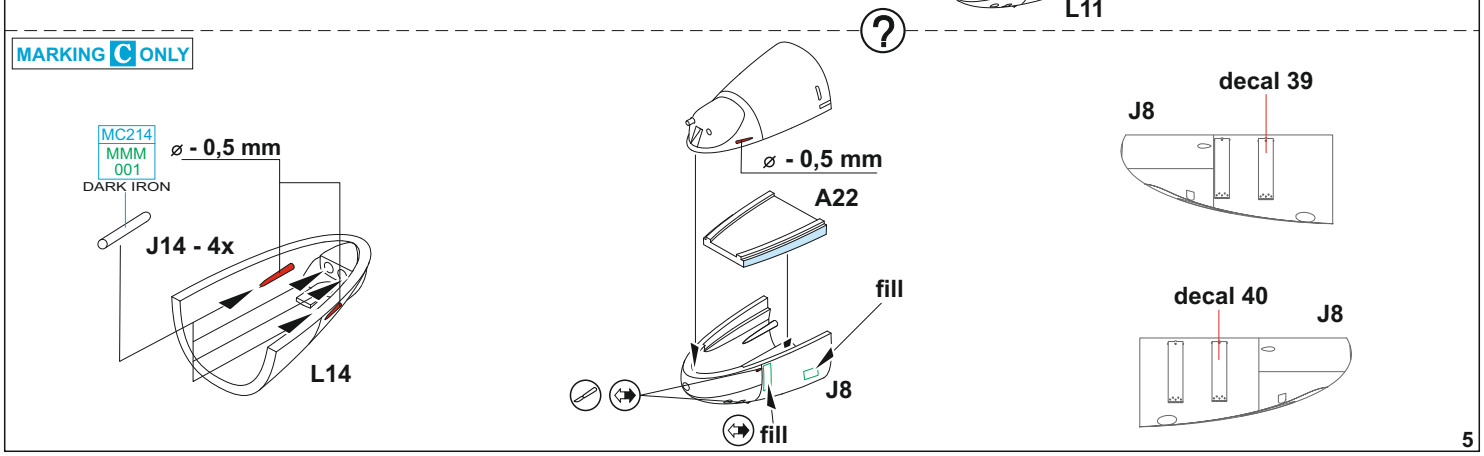
MARKING C ONLY
MC214
MMM
001
DARK IRON
ø - 0,5 mm
J14 - 4x
L14
ø - 0,5 mm
A22
fill
J8
fill
decal 39
J8
decal 40
J8

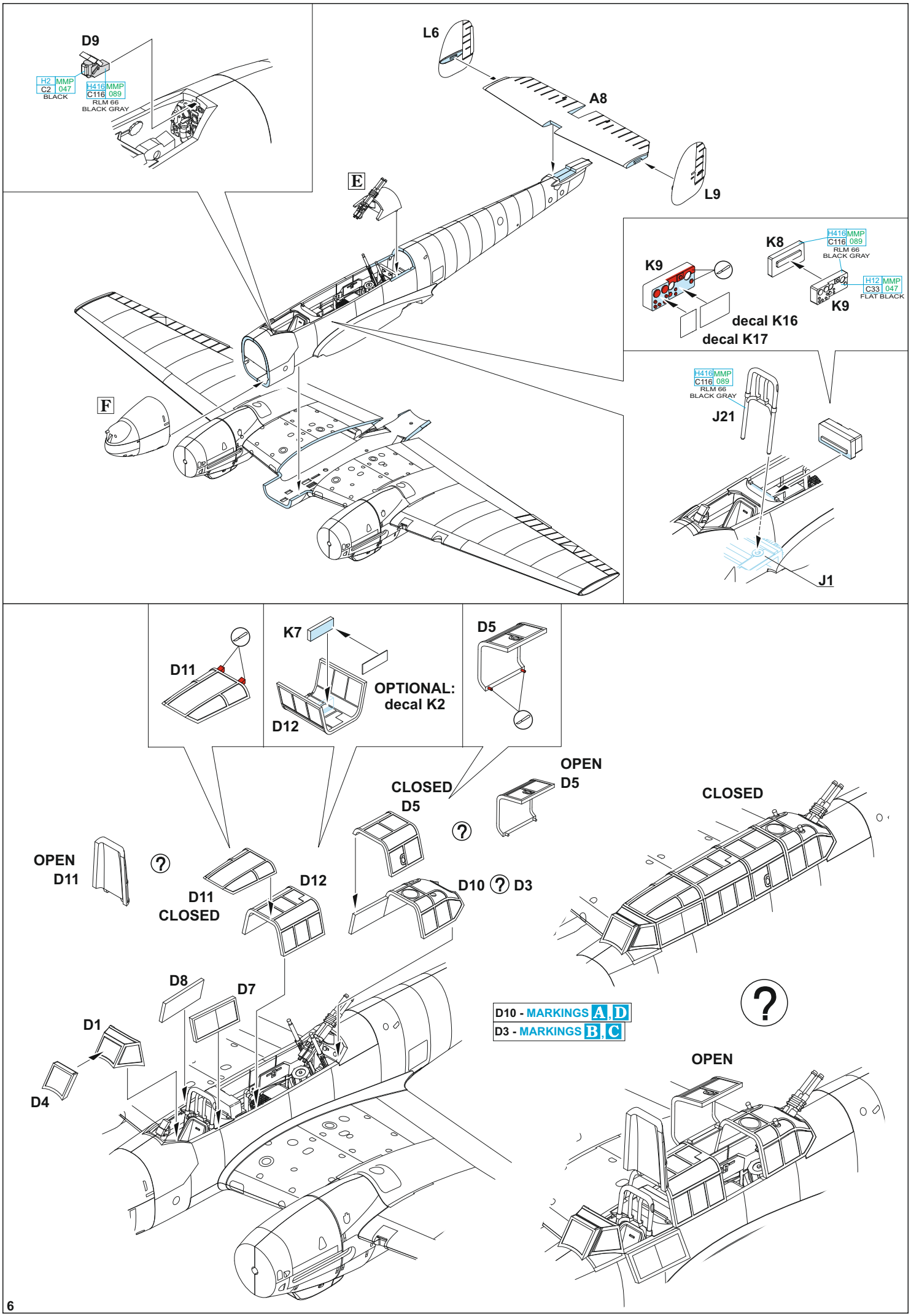
D9
H2 MMP
C2 047
BLACK
H416 MMP
C116 089
RLM 66
BLACK GRAY
L6
A8
L9
E
F
K8
H416 MMP
C116 089
RLM 66
BLACK GRAY
K9
H12 MMP
C33 047
FLAT BLACK
K9
decal K16
decal K17
H416 MMP
C116 089
RLM 66
BLACK GRAY
J21
J1
D11
K7
OPTIONAL:
decal K2
D12
D5
OPEN
D5
CLOSED
D5
CLOSED
OPEN
D11
D11
CLOSED
D12
D10 ? D3
D8
D7
D1
D4
D10 - MARKINGS A, D
D3 - MARKINGS B, C
OPEN

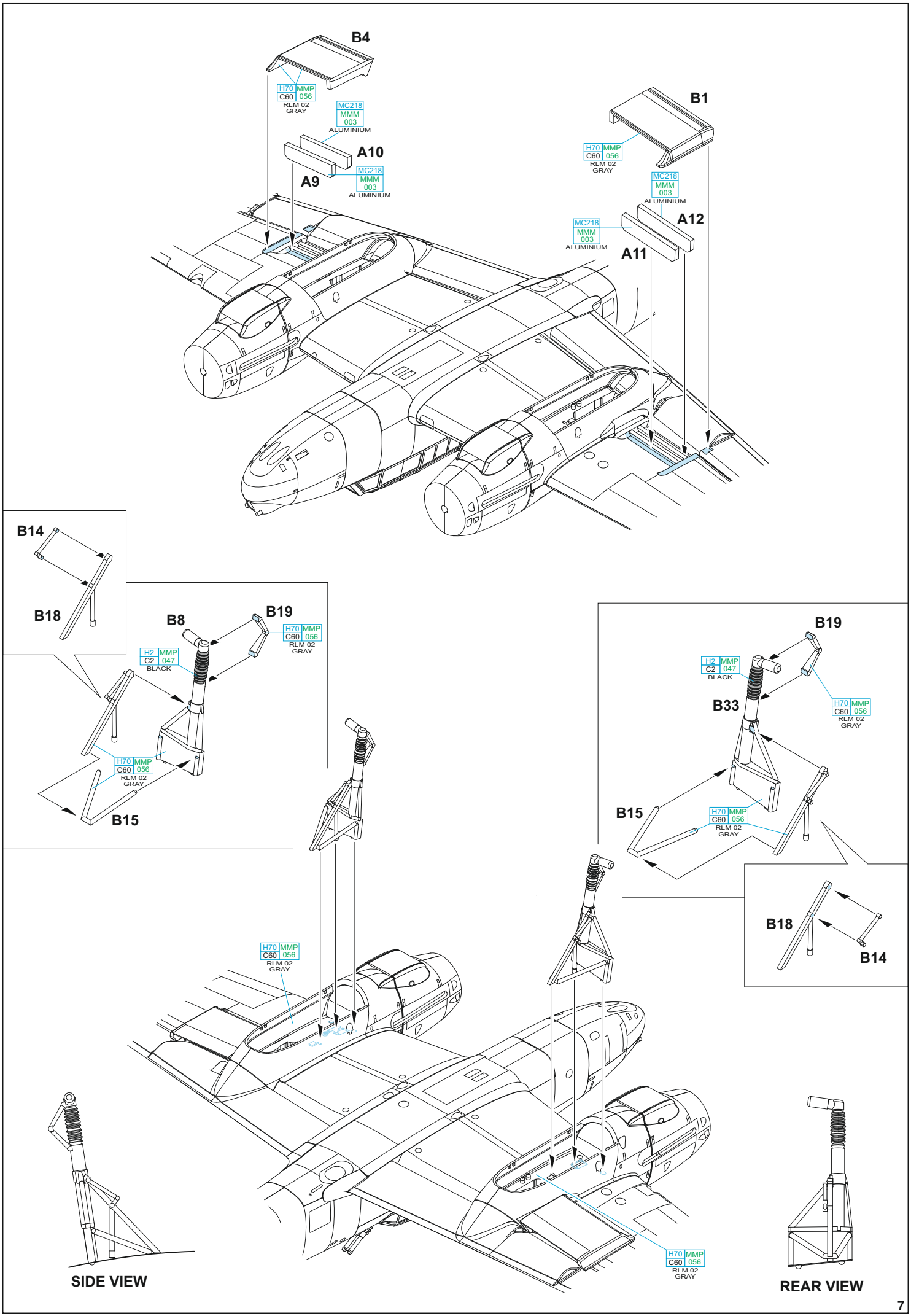
B4
H70 MMP
C60 056
RLM 02
GRAY
MC218
MMM
003
ALUMINIUM
A10
A9
MC218
MMM
003
ALUMINIUM
B1
H70 MMP
C60 056
RLM 02
GRAY
MC218
MMM
003
ALUMINIUM
A12
MC218
MMM
003
ALUMINIUM
A11
B14
B18
B8
B19
H70 MMP
C60 056
RLM 02
GRAY
H2 MMP
C2 047
BLACK
H70 MMP
C60 056
RLM 02
GRAY
B15
B19
H2 MMP
C2 047
BLACK
B33
H70 MMP
C60 056
RLM 02
GRAY
B15
H70 MMP
C60 056
RLM 02
GRAY
B18
B14
H70 MMP
C60 056
RLM 02
GRAY
H70 MMP
C60 056
RLM 02
GRAY
SIDE VIEW
REAR VIEW

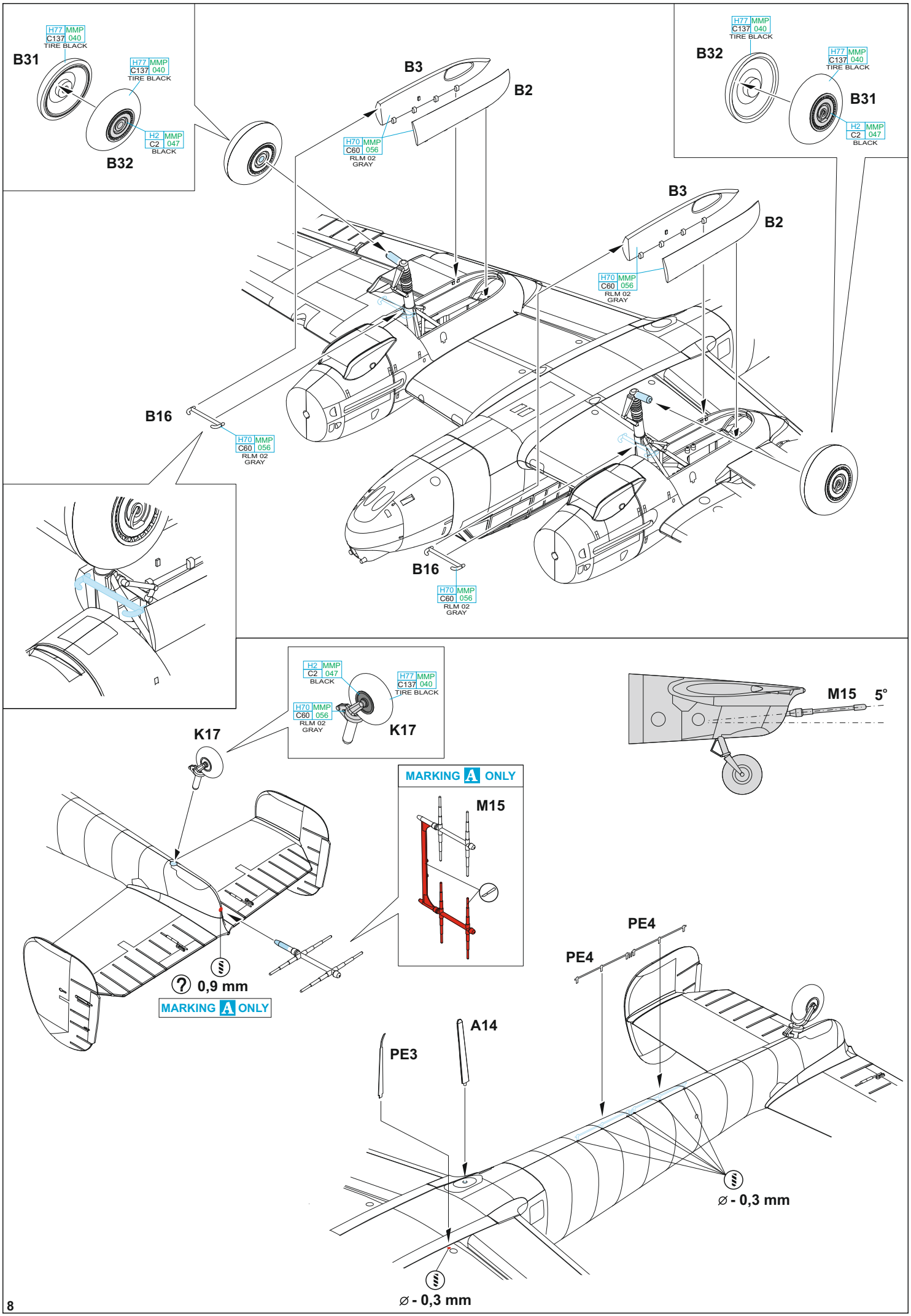
B31
H77 MMP C137 040 TIRE BLACK
H77 MMP C137 040 TIRE BLACK
H2 MMP C2 047 BLACK
B32
B3
B2
H70 MMP C60 056 RLM 02 GRAY
B32
H77 MMP C137 040 TIRE BLACK
H77 MMP C137 040 TIRE BLACK
B31
H2 MMP C2 047 BLACK
B3
B2
H70 MMP C60 056 RLM 02 GRAY
B16
H70 MMP C60 056 RLM 02 GRAY
B16
H70 MMP C60 056 RLM 02 GRAY
H2 MMP C2 047 BLACK
H77 MMP C137 040 TIRE BLACK
H70 MMP C60 056 RLM 02 GRAY
K17
K17
M15
5°
MARKING A ONLY
M15
0,9 mm
MARKING A ONLY
PE4
PE4
A14
PE3
⌀ - 0,3 mm
⌀ - 0,3 mm

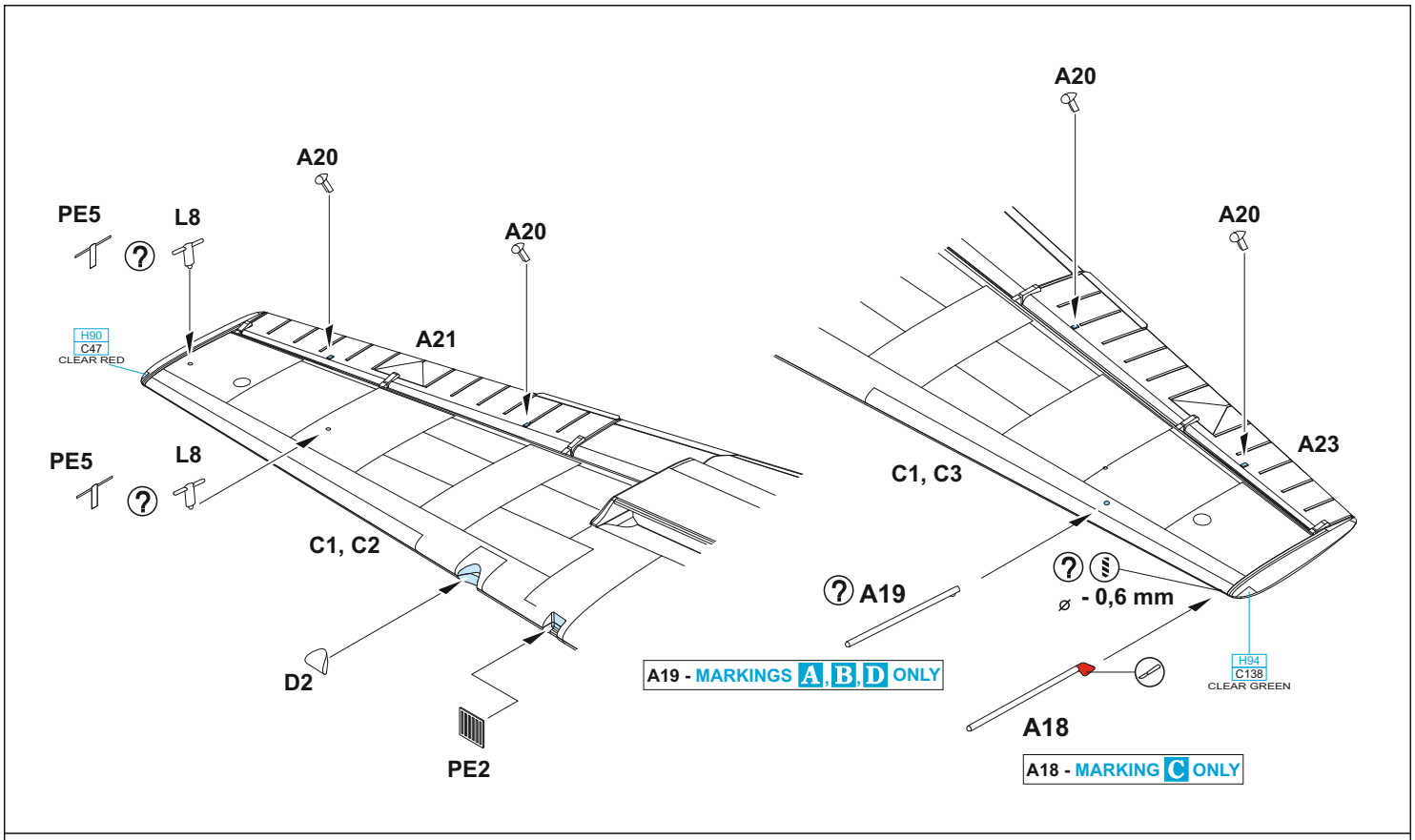
PE5
L8
A20
A20
A21
H90
C47
CLEAR RED
PE5
L8
C1, C2
D2
PE2
A20
A20
A23
C1, C3
A19
⌀ - 0,6 mm
H94
C138
CLEAR GREEN
A18
A19 - MARKINGS A, B, D ONLY
A18 - MARKING C ONLY

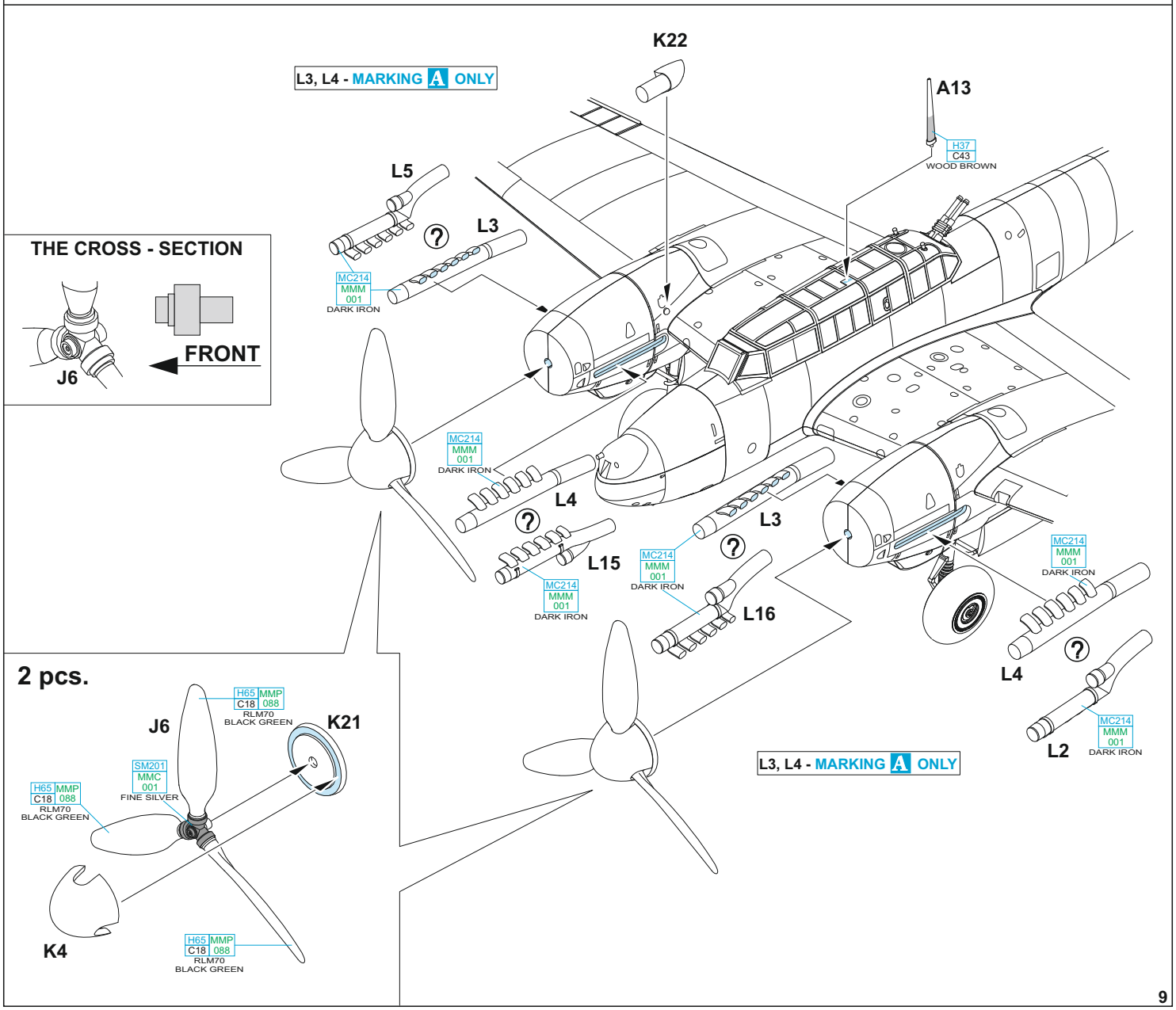
K22
L3, L4 - MARKING A ONLY
A13
H37
C43
WOOD BROWN
L5
L3
MC214
MMM
001
DARK IRON
THE CROSS - SECTION
J6
FRONT
MC214
MMM
001
DARK IRON
L4
L15
MC214
MMM
001
DARK IRON
L3
MC214
MMM
001
DARK IRON
L16
MC214
MMM
001
DARK IRON
L4
L2
MC214
MMM
001
DARK IRON
L3, L4 - MARKING A ONLY
2 pcs.
J6
H65 MMP
C18 088
RLM70
BLACK GREEN
K21
SM201
MMC
001
FINE SILVER
H65 MMP
C18 088
RLM70
BLACK GREEN
K4
H65 MMP
C18 088
RLM70
BLACK GREEN

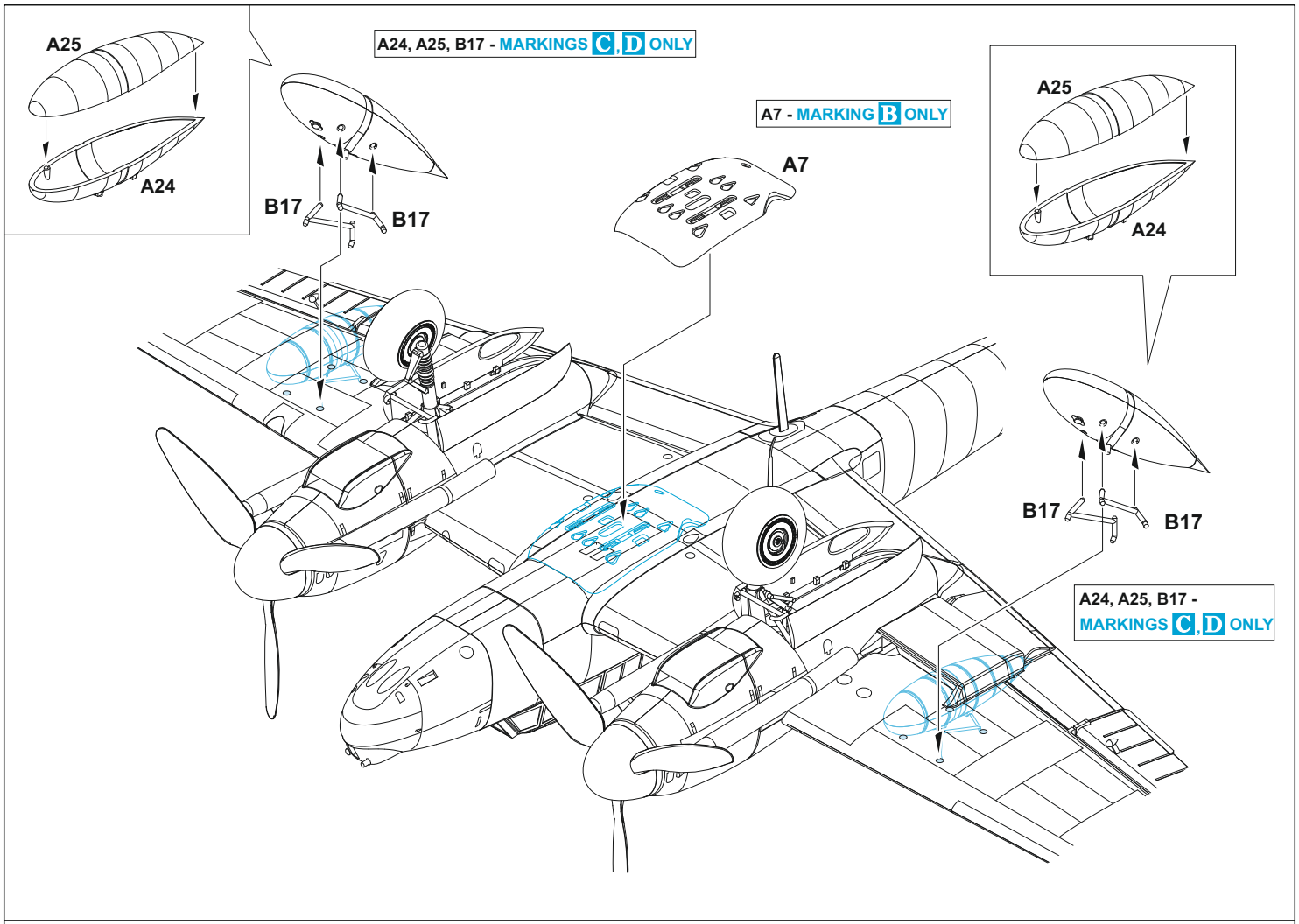
A25
A24
A24, A25, B17 - MARKINGS C, D ONLY
B17
B17
A7 - MARKING B ONLY
A7
A25
A24
B17
B17
A24, A25, B17 -
MARKINGS C, D ONLY

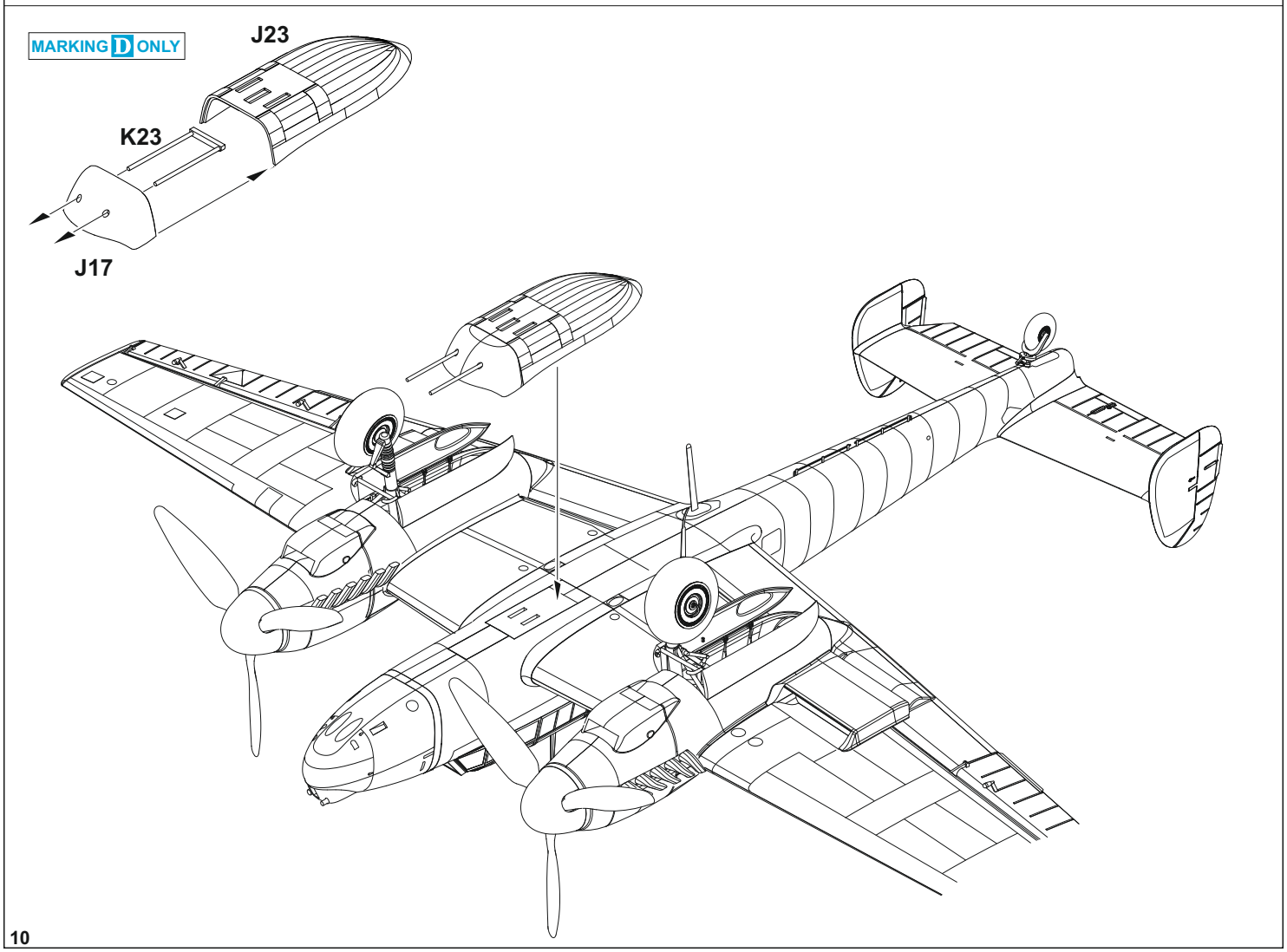
MARKING D ONLY
J23
K23
J17

MARKING A

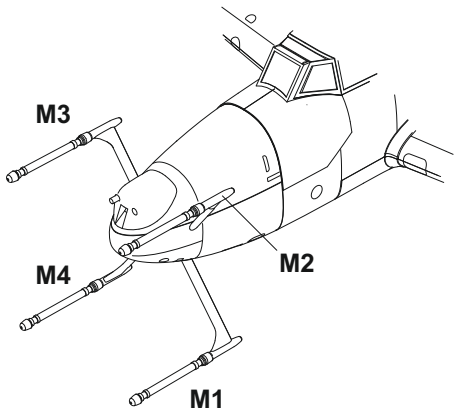

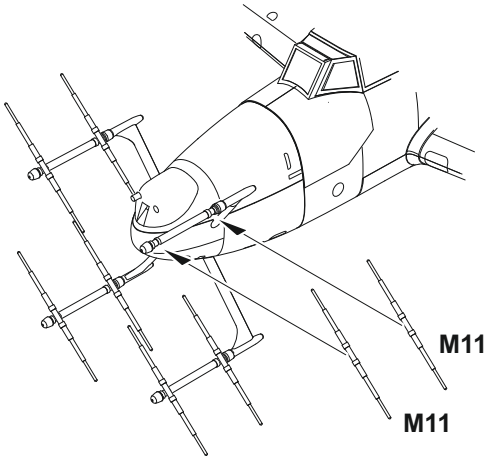

dipoles angle 45°

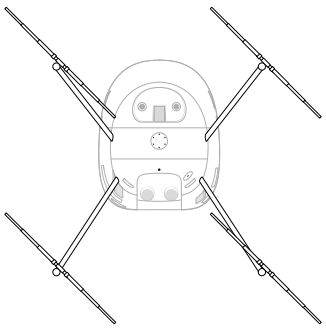

MARKINGS B, C

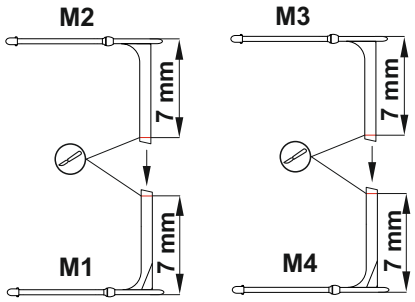

4 pcs.

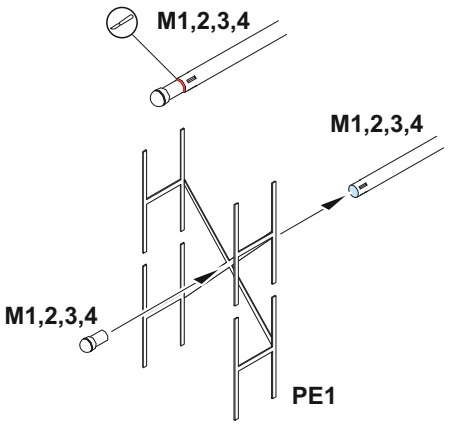

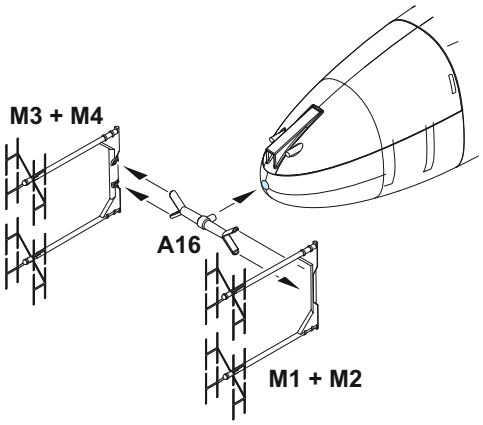

MARKING D

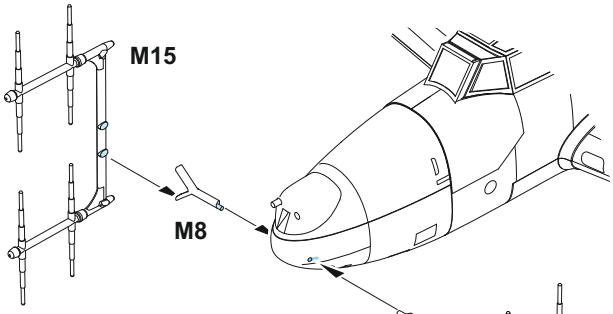

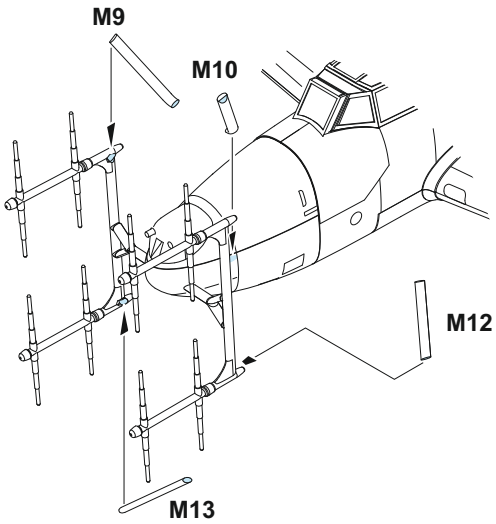

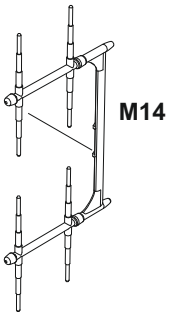

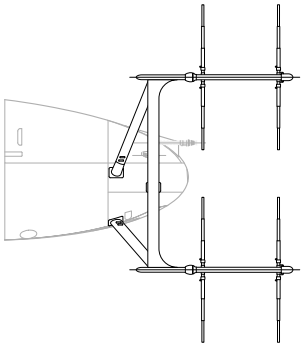

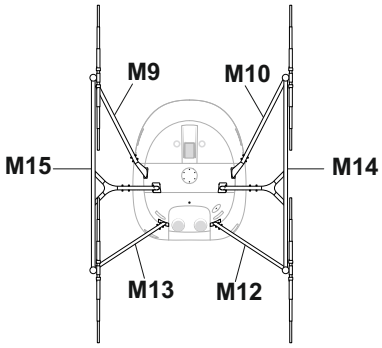

A Hptm. Wilhelm Johnen, 7./NJG 6, Neubiberg, Germany, 1945

Messerschmitt Bf 110G-4 coded 2Z+FR from 7./NJG 6 was one of the aircraft the Allies found at the Neubiberg airport in the spring of 1945. Even though according its codes it belonged to 7. Staffel it was actually a personal aircraft of Wilhelm Johnen, III./NJG 6 commander. This airplane is much less known as the another Johnen's aircraft coded C9+EN in which he performed an emergency landing due to the damaged engine at night April 27-28, 1944. 2Z+FR was his last aircraft from the later production, equipped with the FuG 220 SN-2D antenna system with dipoles fixed at 45 degrees, Eberspächer type exhausts and Schräge Musik cannons. The camouflage was painted in RLM 76 on the lower and side surfaces and RLM 75 on the upper surfaces. Those were lightened by spraying the irregular „snakes" in RLM 76 quite densely so only small patches of darker color were visible.

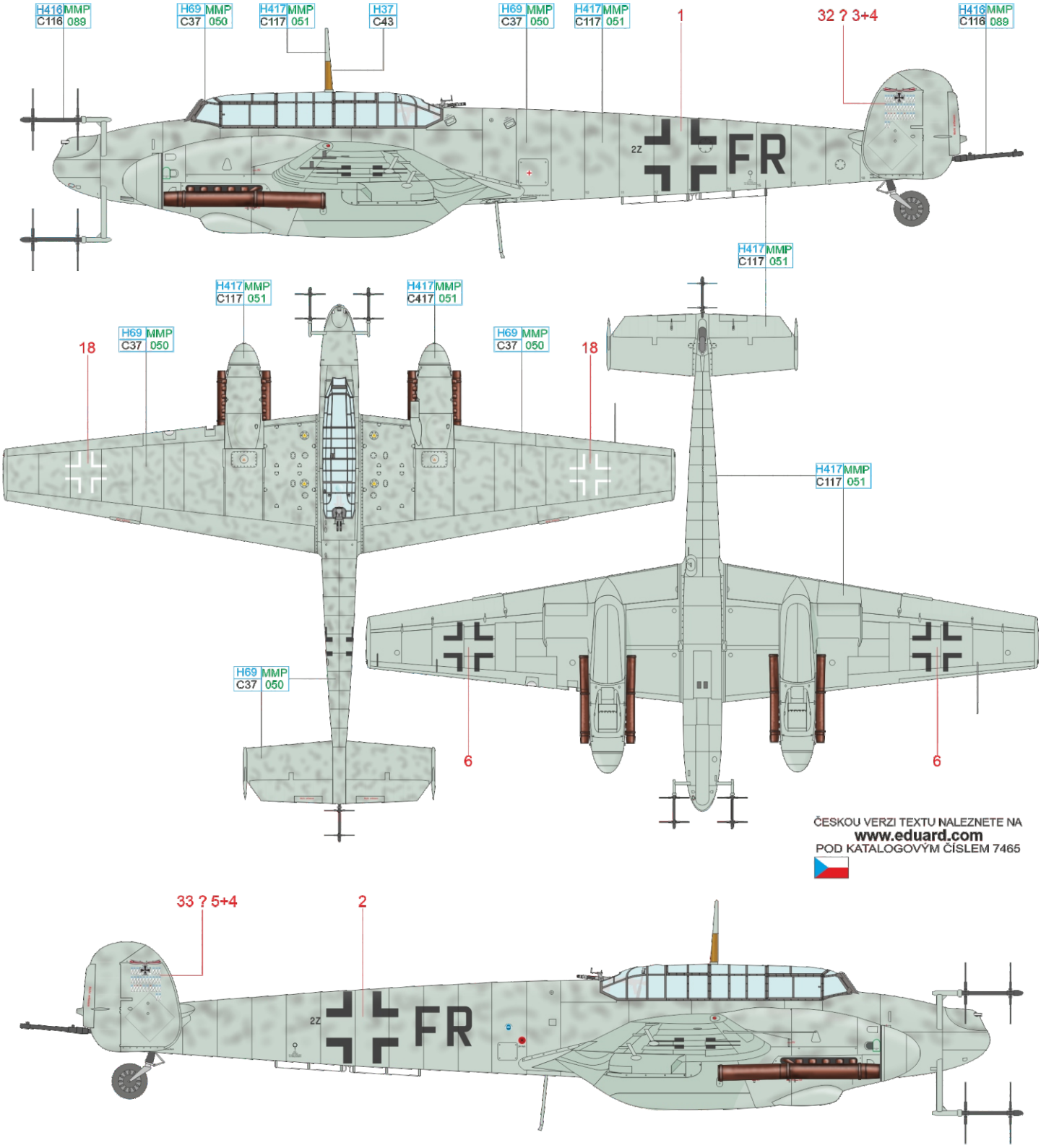

ČESKOU VERZI TEXTU NALEZNETE NA
www.eduard.com
POD KATALOGOVÝM ČÍSLEM 7465

RLM 75	H69 MMP C37 050	RLM 76	H417 MMP C117 051	RLM 66	H416 MMP C116 089	WOOD	H37 C43

eduard

B WNr. 5427, Oblt. Ernst-Georg Drünkler, 2./NJG 5, Leeuwarden, the Netherlands, June 1943

In October 1942 Oblt. Ernst-Georg Drünkler was transferred to 1./NJG 1 and later to NJG 5. Bf 110G-4 coded C9+AK from 2./NJG 5 was equipped with FuG 202 antenna system and Eberspächer type exhausts. The camouflage was painted in RLM 76 on the lowere and side surfaces, RLM 74 and RLM 75 on the upper surfaces. During the night of June 12-13, 1943 the RAF Bomber Command dispatched 501 aircraft to Bochum in the continued Battle of Rhurland, 323 of the bombers were Avro Lancasters and 167 Handley Page Halifaxes plus eleven Mosquitos. On that night Oblt. Ernst-Georg Drünkler claimed his first two aerial victories. During this mission on early morning his Bf 110G-4 (serial number 5427) was damaged by the bombers' defense fire resulting in the forced landing in the water canal at Bergervaart near Bergen op Zoom. The airplane was destroyed.

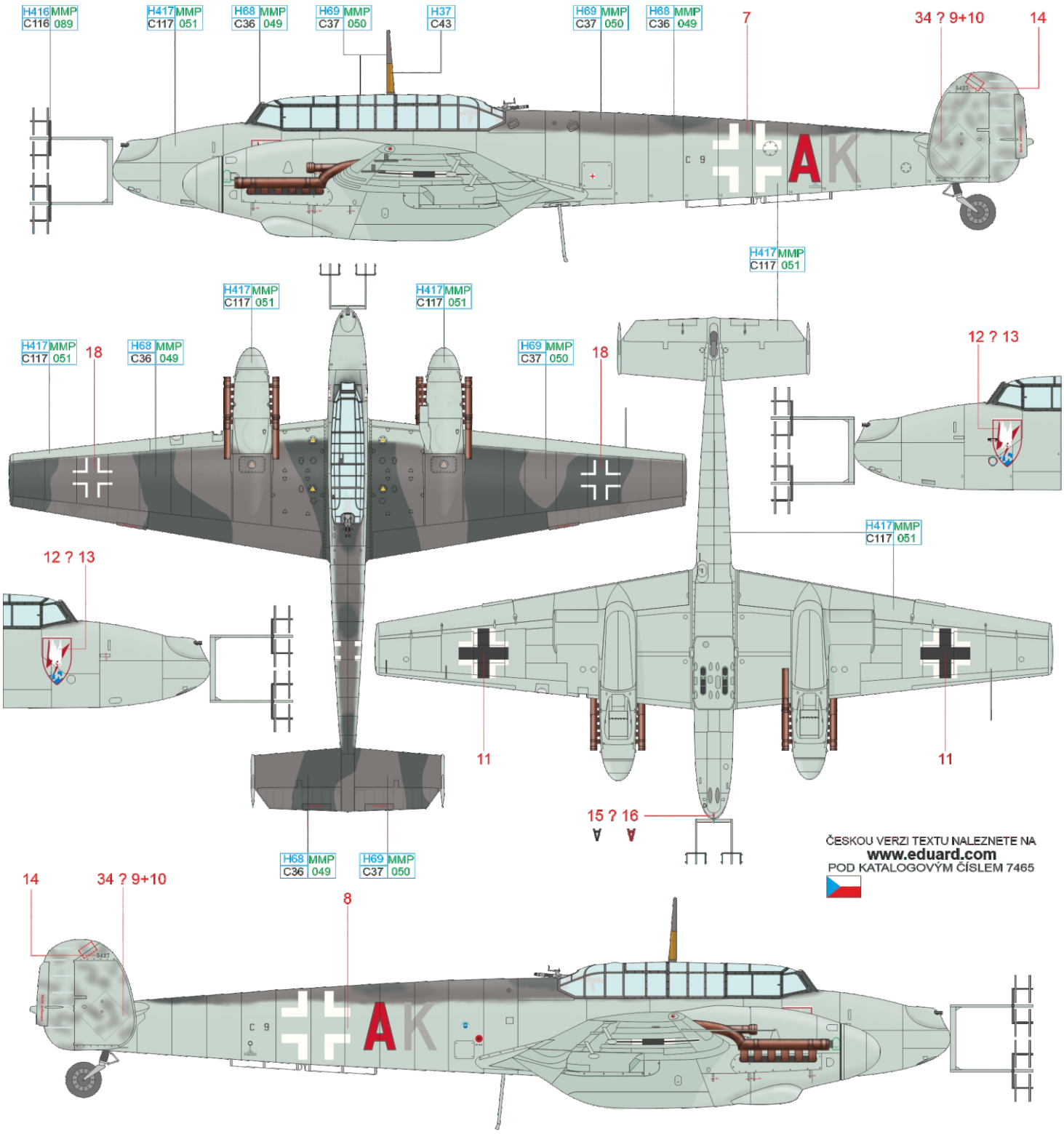

ČESKOU VERZI TEXTU NALEZNETE NA
www.eduard.com
POD KATALOGOVÝM ČÍSLEM 7465

RLM 74	H68 MMP C36 049	RLM 75	H69 MMP C37 050	RLM 76	H417 MMP C117 051	RLM 66	H416 MMP C116 089	WOOD	H37 C43

C WNr. 5547, Ofw. Helmut Treynogga & Uffz. Heinz Schwarz, 6./NJG 6, Stuttgart-Echterdingen, Germany, March 1944

On the night of March 15-16, 1944, after an unsuccessful attempt at intercepting the British bombers raiding Munich, Ofw. Helmut Treynogga lost the orientation and due to the shortage of fuel landed at Dübendorf airport in Switzerland. Together with his radio-operator Uffz. Heinz Schwarz he was interned for five weeks during which time the aircraft equipped with FuG 202 radar was intensively tested. After the return to Germany Ofw. Treynogga was re-assigned to the night fighter unit. On the night of June 4-5, 1944 he again lost the orientation over the Italian city of Graziano. He bailed out but was found dead. Bf 110G-4 coded 2Z+OP which Ofw. Treynogga landed in Switzerland was camouflaged in RLM 74 and RLM 75 on the upper and side surfaces, the lower surfaces were sprayed in RLM 76 except of the lower starboard wing which was painted black. The aircraft lacked two MG 151/20 cannons typically mounted on the lower fuselage.

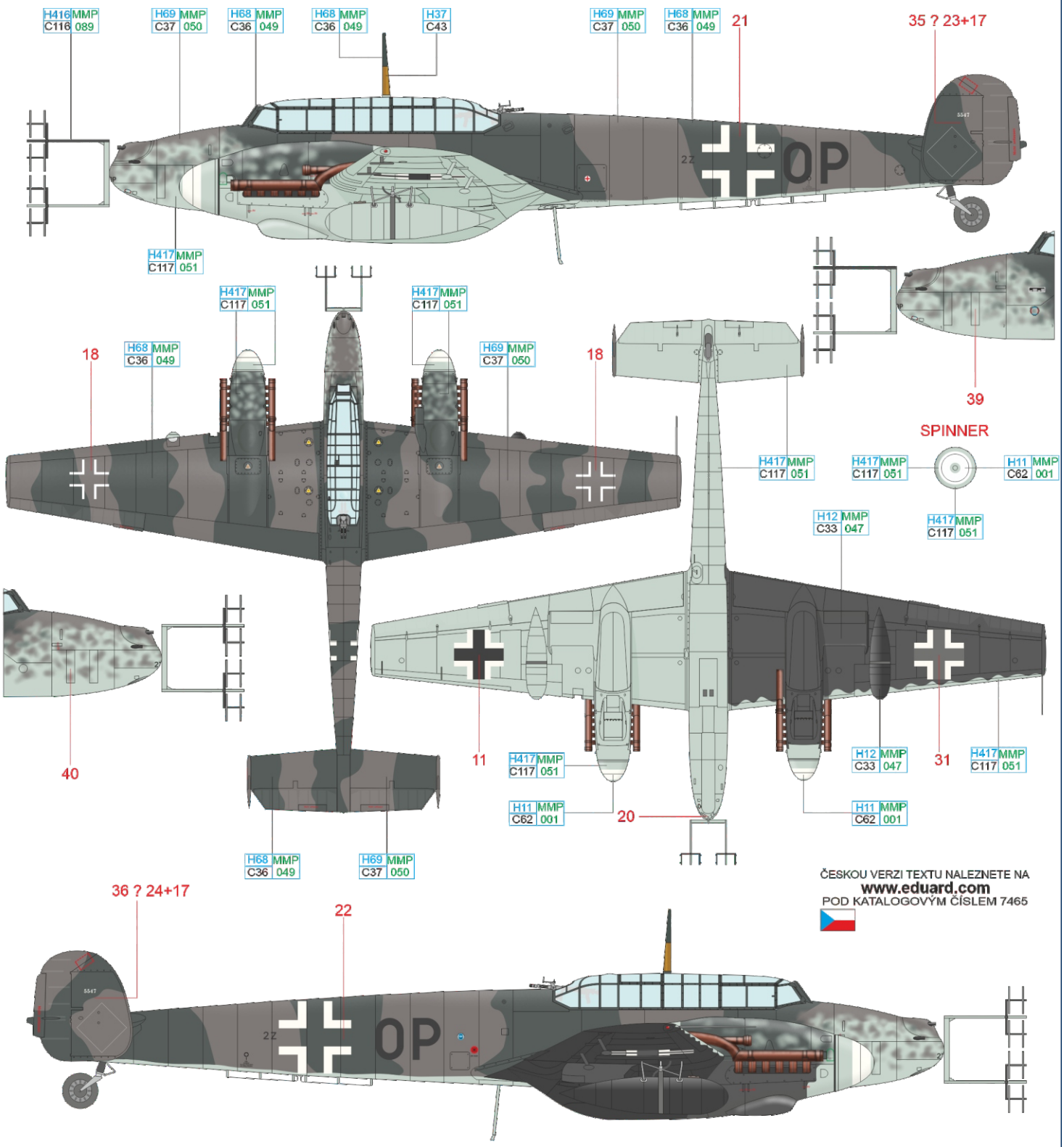

ČESKOU VERZI TEXTU NALEZNETE NA
www.eduard.com
POD KATALOGOVÝM ČÍSLEM 7465

RLM 74	H68 MMP C36 049	RLM 75	H69 MMP C37 050	RLM 76	H417 MMP C117 051	RLM 66	H416 MMP C116 089	WOOD	H37 C43	WHITE	H11 MMP C62 001	BLACK	H12 MMP C33 047

eduard

D WNr. 720260, Oblt. Heinz-Wolfgang Schnaufer, Stab IV./NJG 1, Saint Trond, Belgium, April 1944

Heinz-Wolfgang Schnaufer, the most successful night fighter ace of all times, recipient of the Knight Cross with Oak Leaves, Swords and Diamonds, flew from the beginning of his military aviation career with night fighter units. In total he shot down 121 enemy aircraft, predominantly the four-engine British bombers. During the whole war he was wounded only once and none of his crew members was ever wounded in combat. He survived the war and at the end of hostilities dedicated himself to the family wine business. He died on June 15, 1950, two days after his personal car had collided with a truck in Cestas near Bordeaux in France. Schnaufer, nicknamed „The Night Ghost of St. Trond", flew this Bf 110G-4 during the spring months of 1944 when he assumed command of IV. Gruppe Nachtjagdgeschwader 1. The aircraft original camouflage of RLM 74 and RLM 75 on the upper surfaces partially showed through the overcoat of RLM 76. The lower and side surfaces remained in the original coat of RLM 76, the lower port wing surface was painted black.

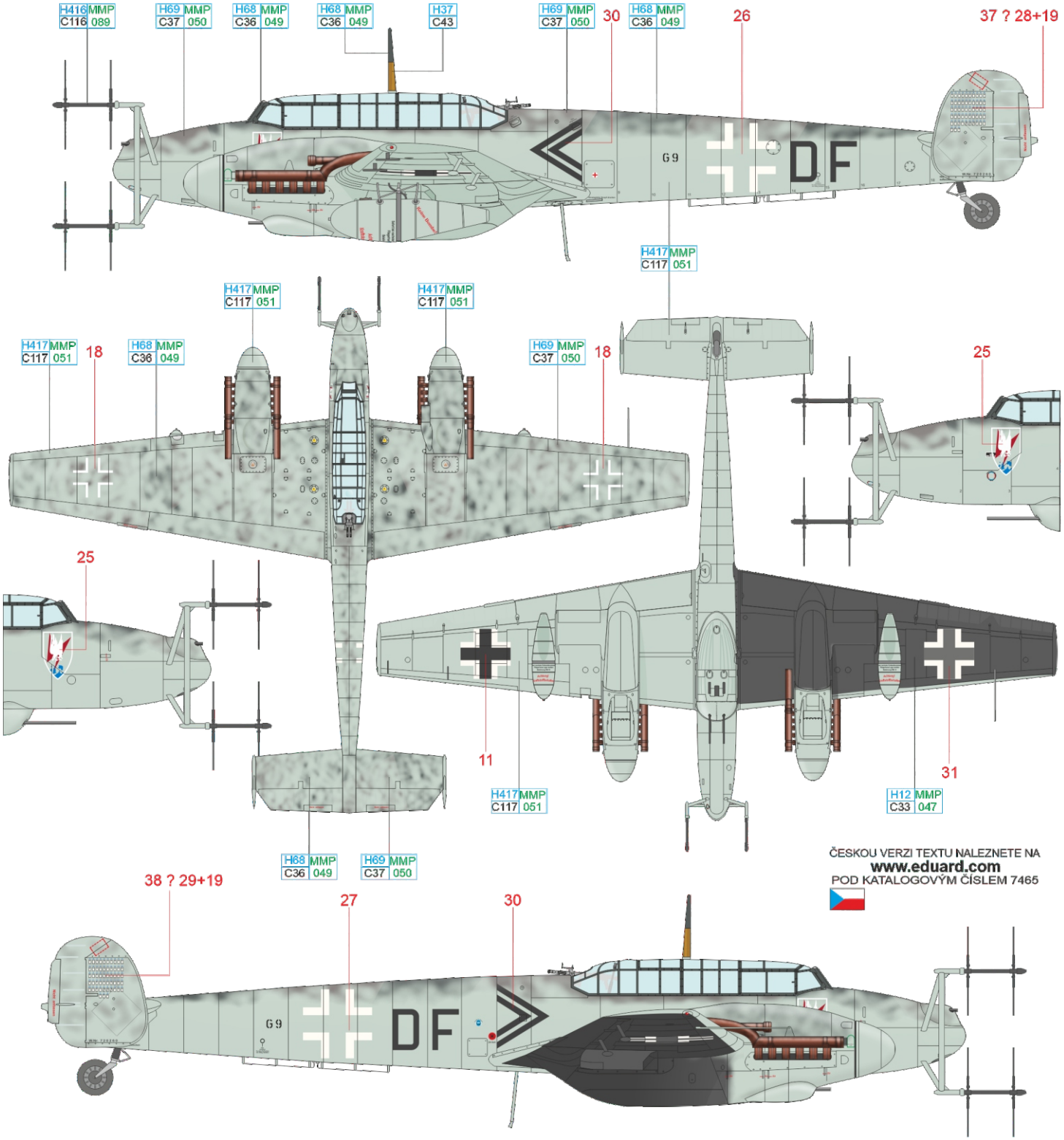

ČESKOU VERZI TEXTU NALEZNETE NA
www.eduard.com
POD KATALOGOVÝM ČÍSLEM 7465

RLM 74	H68 MMP C36 049	RLM 75	H69 MMP C37 050	RLM 76	H417 MMP C117 051	RLM 66	H416 MMP C116 089	WOOD	H37 C43	BLACK	H12 MMP C33 047

eduard

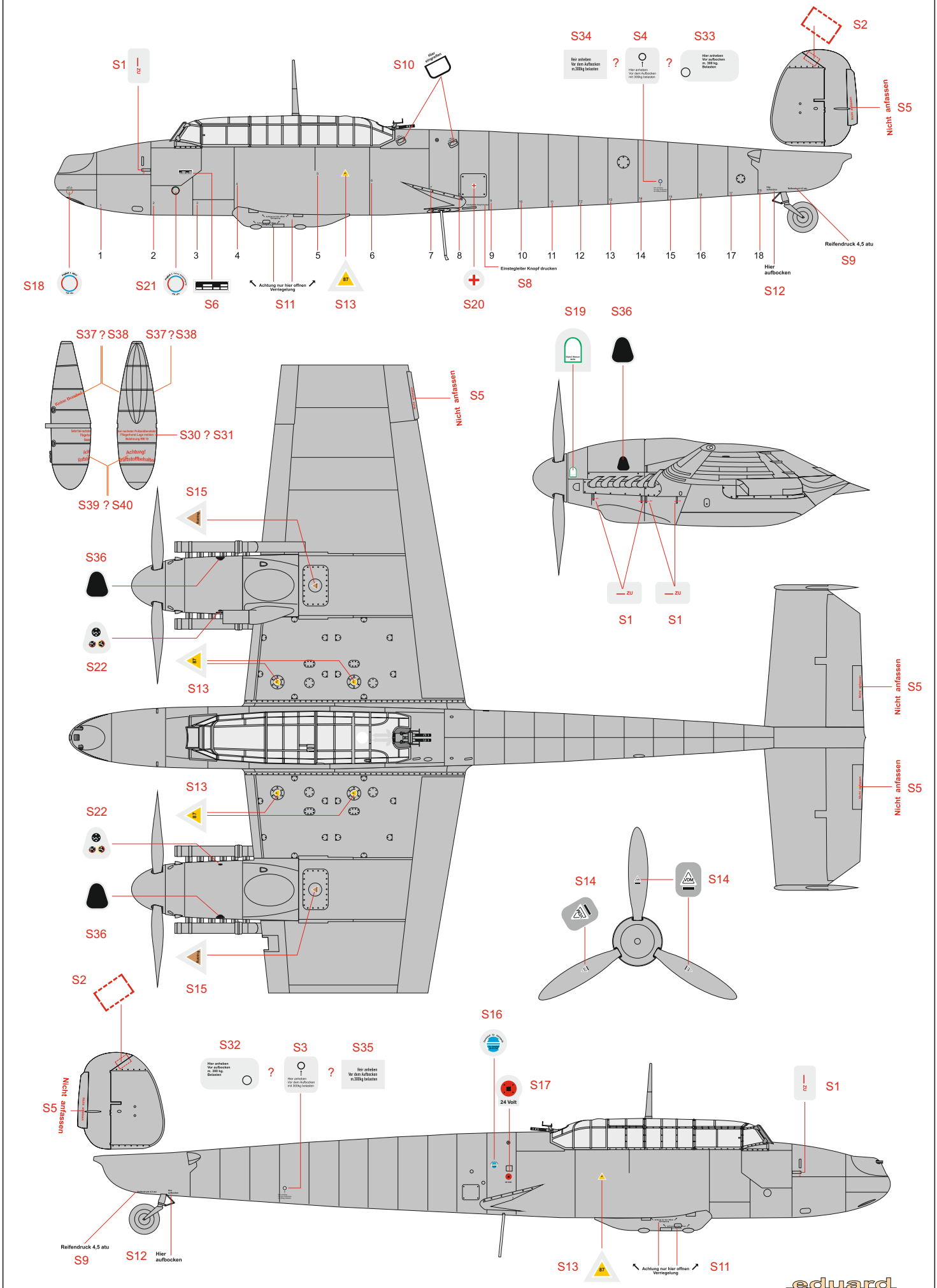

© EDUARD M.A. 2022