**1:72 SCALE** **ITEM NO.:01624**

# Su-15 Flagon-A

# 苏-15 "细嘴瓶" -A

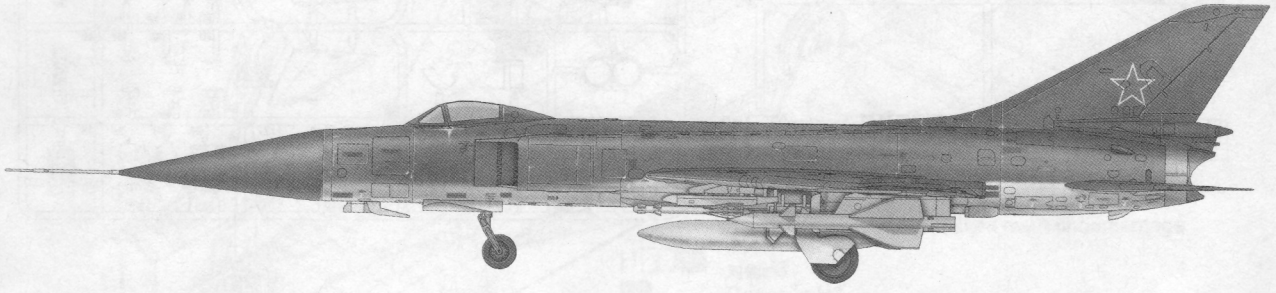

READ BEFORE ASSEMBLY:

- This kit is not recommended for inexperienced modelers or for children under 14 years of age
- Study and understand these instructions thoroughly before beginning assembly
- When needed, remove photo-etch parts carefully using a modeling knife or photo etch sprue cutter, being careful not to damage or lose small parts.
- Take extra care in handling photo etch parts in order to avoid injury
- Apply instant cement sparingly to photo etch parts where instructed
- Tools recommended(not included in kit):Plastic and instant cements, sprue cutters,long nose pliers,,modeling knife, small files, tweezers, pin vise & scissors. Soft cloth and sandpaper will also assist in construction
- Glue and paint are not included in the kit. Use plastic cement and hobby paints only. Color guide for purchasing paint is included in the kit.
- Keep out of reach of children. They must not be allowed to ingest small parts or handle plastic bags in any way.

装配之前仔细阅读

- 小心用模型锉刀锉平所有零件表面的注射浇口。
- 小心用刀片切下蚀刻片零件，不要遗失小零件。
- 用强力快干胶水粘合蚀刻片零件和金属轴。过量快干胶水使用可能导致可动零件会粘住，小心涂胶。
- 取蚀刻片时应特别注意安全，防止利边划伤手指。
- 某些零件表面需贴上水贴纸，请选择在装配的同时进行。
- 推荐模型工具(自备)：胶水，水口剪刀，长咀钳，刀片，锉刀，镊子，钳，钻，剪刀，瞬间快干胶。
- 软布同砂纸同时也应该是必备工具。
- 请使用塑料胶水和油漆，模型内不含。
- 谨防小孩吸吮塑料零件，或者将塑料袋套在头上，制作时应将套材远离小孩接触。
- 本产品不适合14岁以下没有经验的模型爱好者。

Cyanoacrylate glue
使用强力胶

Weight
配重

Make hole
钻孔

Cut /Remove
切除

Bend
弯曲

File / Sand
锉平

Option
选择

No cement
不涂胶水

Decal
贴纸

水贴纸的使用：

1. 从水贴纸上剪下印花；
2. 将印花放入温水中浸10秒，然后放在干净布上。
3. 拿着印花纸板将印花移到模型上；
4. 手指蘸水将印花移到适当的位置；
5. 用软布轻压印花直至水干，汽泡消失。

**DECAL APPLICATION**

1. Cut off decal from sheet.
2. Dip the decal in tepid water 40°C for about 10 sec. and place on a clean cloth.
3. Hold the backing sheet edge and slide decal onto the model.
4. Move decal into position by wetting decal with finger.
5. Press decal gently down with a soft cloth until excess water and air bubbles are gone.

# 部品图
# Parts

A

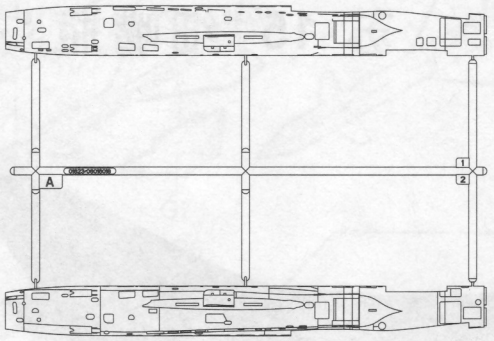

D

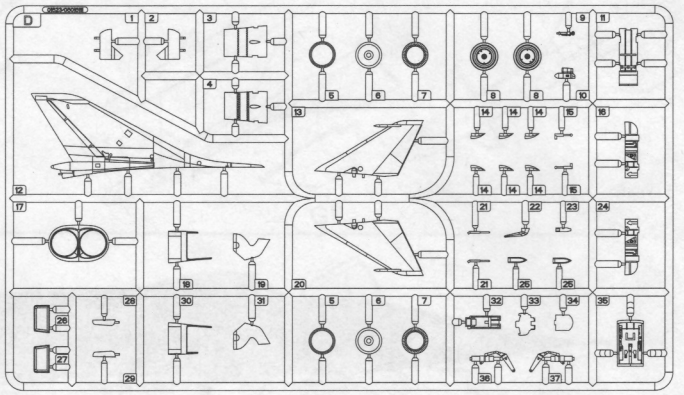

E

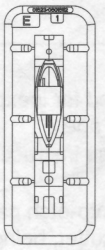

B

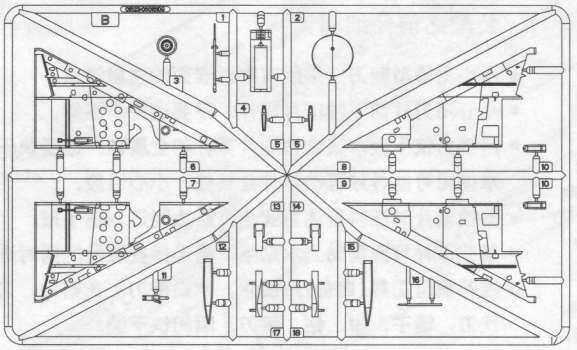

H

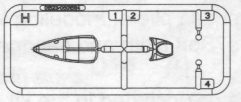

G

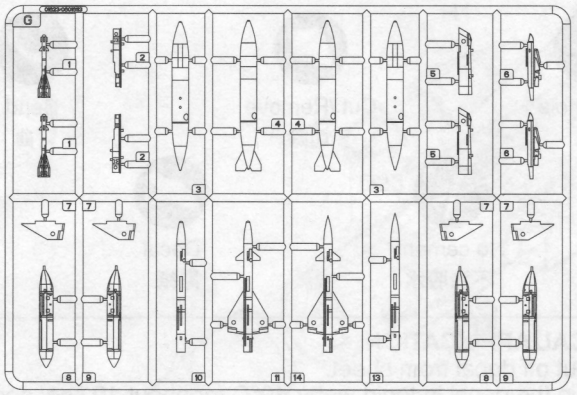

不用的部件：G8、G9
Unused Parts

<<水贴纸>>
Decal

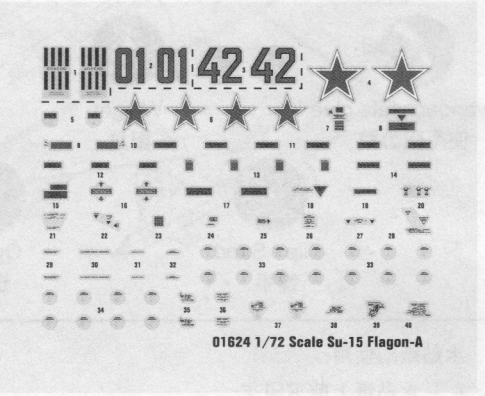

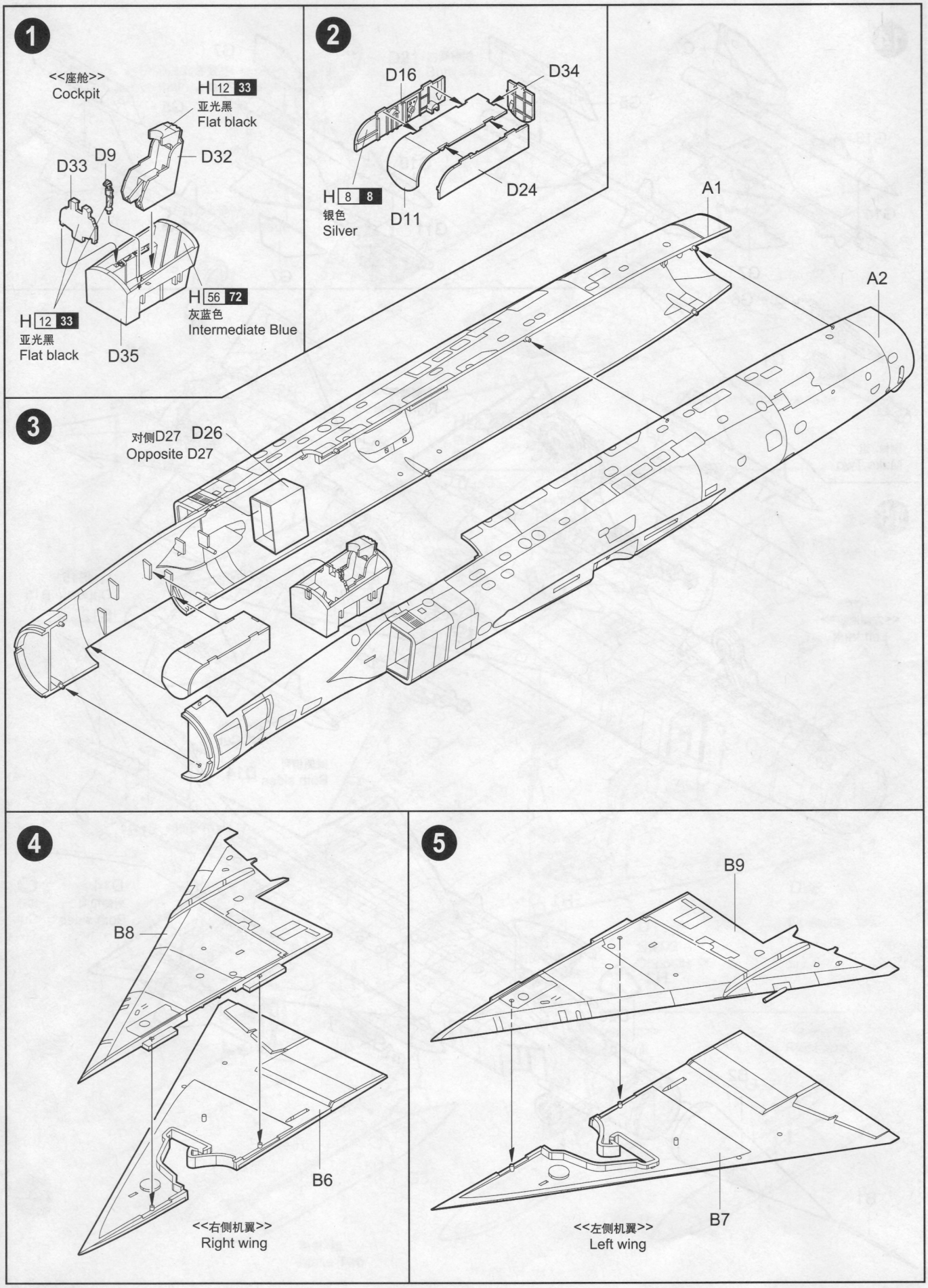
1
<<座舱>>
Cockpit
H 12 33
亚光黑
Flat black
D33
D9
D32
H 56 72
灰蓝色
Intermediate Blue
H 12 33
亚光黑
Flat black
D35
2
D16
D34
D24
H 8 8
银色
Silver
D11
A1
A2
3
对侧D27
Opposite D27
D26
4
B8
B6
<<右侧机翼>>
Right wing
5
B9
B7
<<左侧机翼>>
Left wing

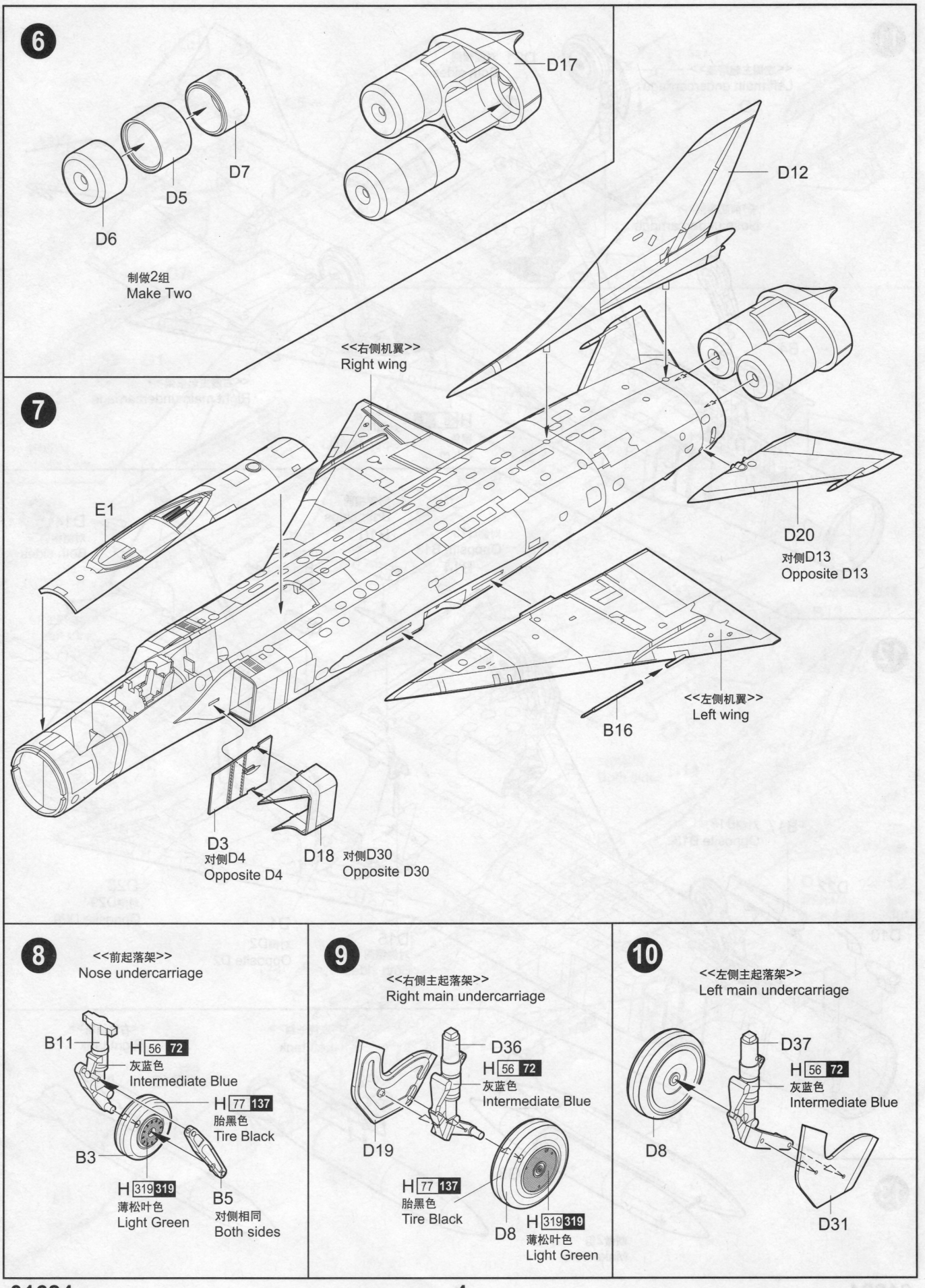
6
D17
D7
D5
D6
制做2组
Make Two
D12
<<右侧机翼>>
Right wing
7
E1
D20
对侧D13
Opposite D13
<<左侧机翼>>
Left wing
B16
D3
对侧D4
Opposite D4
D18
对侧D30
Opposite D30
8
<<前起落架>>
Nose undercarriage
B11
H 56 72
灰蓝色
Intermediate Blue
H 77 137
胎黑色
Tire Black
B3
H 319 319
薄松叶色
Light Green
B5
对侧相同
Both sides
9
<<右侧主起落架>>
Right main undercarriage
D36
H 56 72
灰蓝色
Intermediate Blue
D19
H 77 137
胎黑色
Tire Black
D8
H 319 319
薄松叶色
Light Green
10
<<左侧主起落架>>
Left main undercarriage
D37
H 56 72
灰蓝色
Intermediate Blue
D8
D31

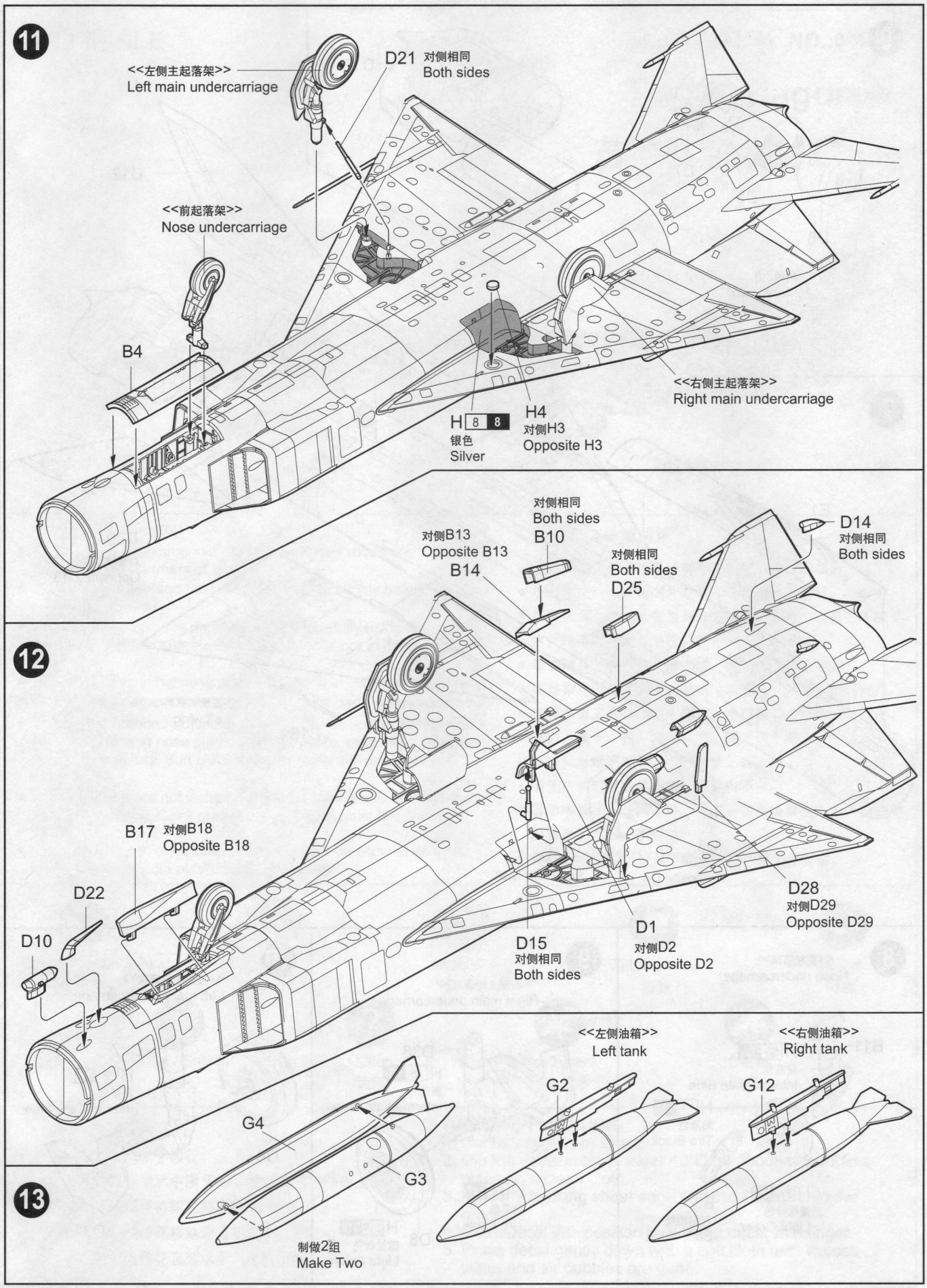
11
<<左侧主起落架>>
Left main undercarriage
D21 对侧相同
Both sides
<<前起落架>>
Nose undercarriage
B4
H 8 8
银色
Silver
H4
对侧H3
Opposite H3
<<右侧主起落架>>
Right main undercarriage
12
对侧相同
Both sides
B10
对侧B13
Opposite B13
B14
对侧相同
Both sides
D25
D14
对侧相同
Both sides
B17 对侧B18
Opposite B18
D22
D10
D15
对侧相同
Both sides
D1
对侧D2
Opposite D2
D28
对侧D29
Opposite D29
13
<<左侧油箱>>
Left tank
<<右侧油箱>>
Right tank
G2
G12
G4
G3
制做2组
Make Two

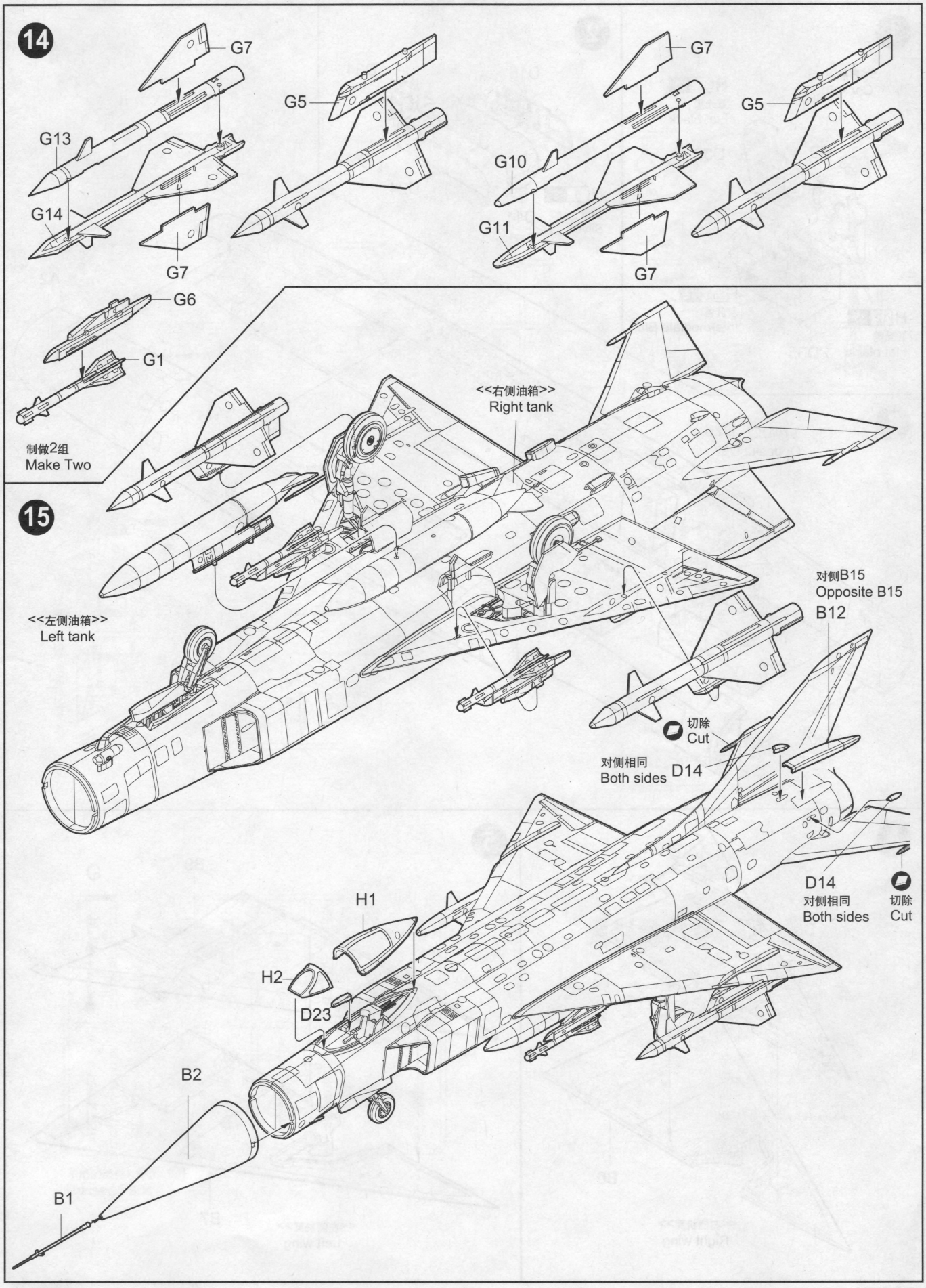
14
G7
G13
G14
G7
G5
G7
G10
G11
G7
G5
G6
G1
制做2组
Make Two
15
<<右侧油箱>>
Right tank
<<左侧油箱>>
Left tank
对侧B15
Opposite B15
B12
切除
Cut
对侧相同
Both sides
D14
D14
对侧相同
Both sides
切除
Cut
H1
H2
D23
B2
B1

# 涂装同标贴指示
# Painting & Marking guide

使用 MR.HOBBY 涂料 Mr. Color Used

| | | | | | |
|---|---|---|---|---|---|
| H 3 3 | 红色 | Red | H 76 61 | 烧铁色 | Burnt Iron |
| H 8 8 | 银色 | Silver | H 56 72 | 灰蓝色 | Intermediate Blue |
| H 18 28 | 黑铁色 | Metal Black | H 77 137 | 胎黑色 | Tire Black |
| H 12 33 | 亚光黑 | Flat black | H 319 319 | 薄松叶色 | Light Green |

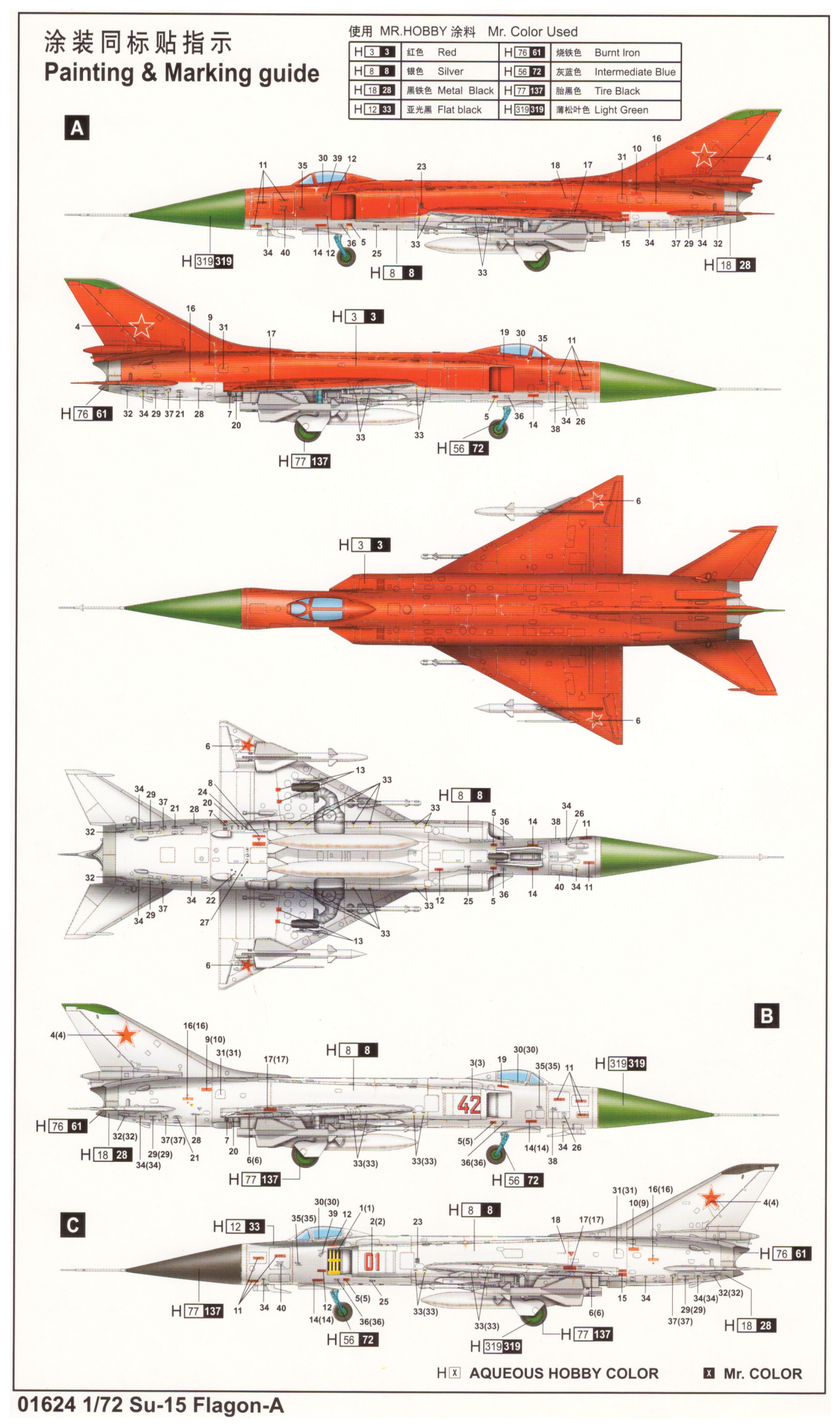


H X AQUEOUS HOBBY COLOR

X Mr. COLOR

**01624 1/72 Su-15 Flagon-A**