EstesRockets.com

AGES 10+

MINI MAX™

2445

Skill Level

INTERMEDIATE

MODEL ROCKET INSTRUCTIONS

KEEP FOR FUTURE REFERENCE

IMPORTANT: Please record date found on decal and keep for future reference. _____

Read all instructions. *Make sure you have all parts and supplies.*

SUPPLIES

PENCIL | FINE SANDPAPER | RULER | YELLOW GLUE | HOBBY KNIFE | WHITE PRIMER | RED & BLACK PAINT | CLEAR COAT (OPTIONAL) | PLASTIC CEMENT | MASKING TAPE | SCISSORS

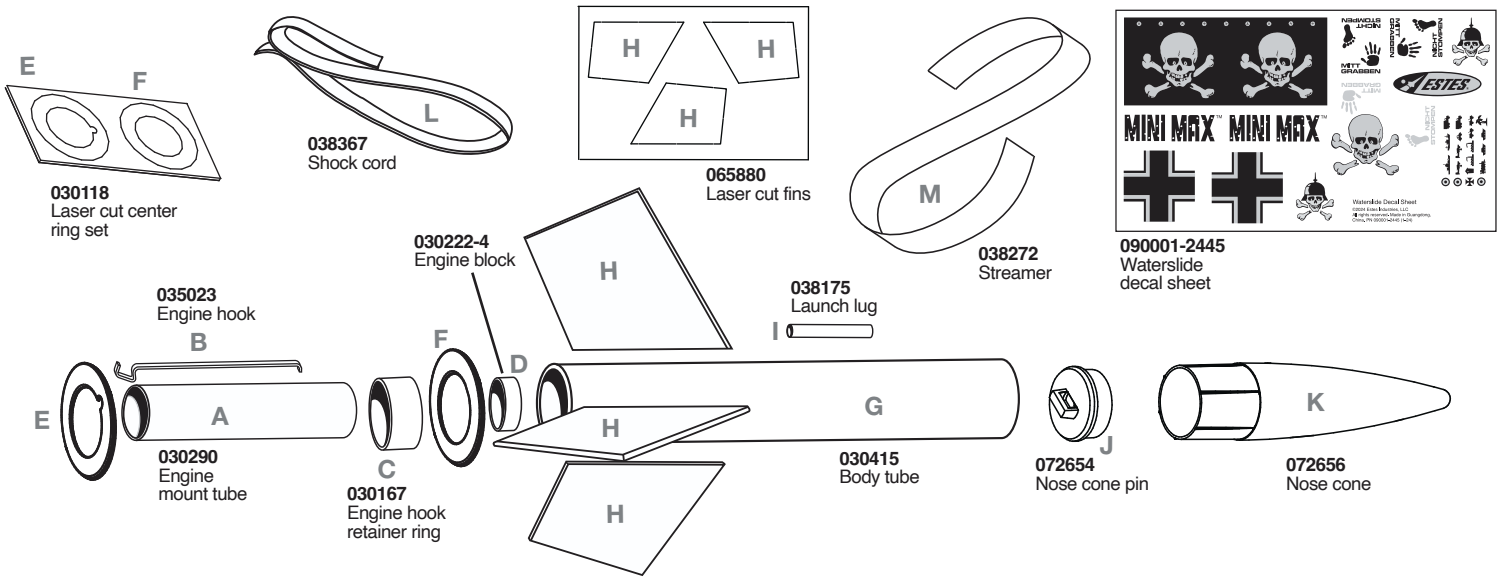

PREPARE FINS

1. Sand both sides of laser cut fins.

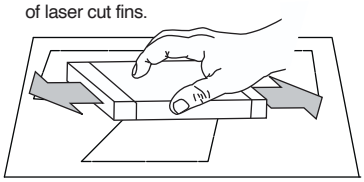

2. Using a hobby knife, cut out laser cut fins.

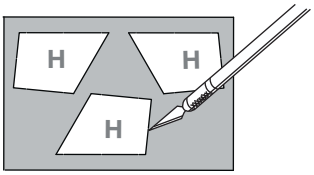

3. Stack fins together and sand all edges.

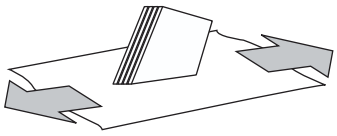

4. Round the leading edge of all fins.

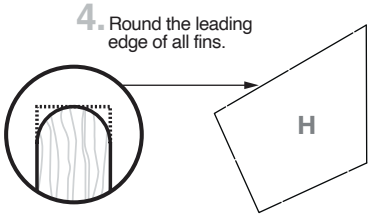

TUBE MARKING

1. Cut out tube marking guide from page 2.

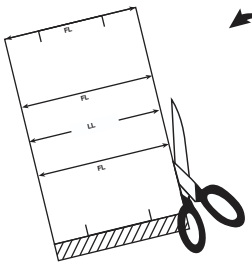

2. Wrap tube marking guide around end of body tube.

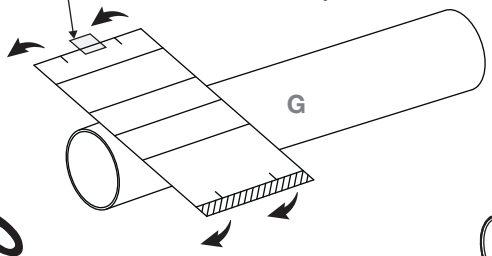

3. Mark all guide lines on body tube.

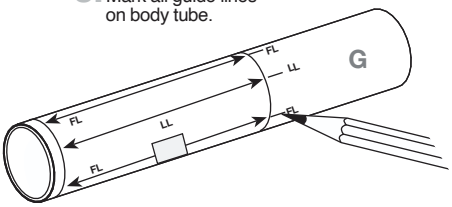

4. Remove guide. Use door frame to extend all lines.

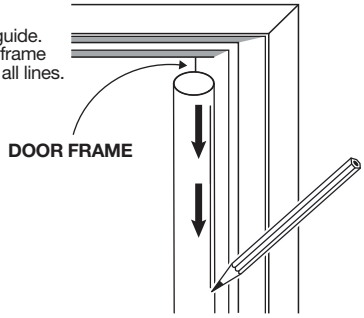

TUBE MARKING GUIDE AND SHOCK CORD MOUNT

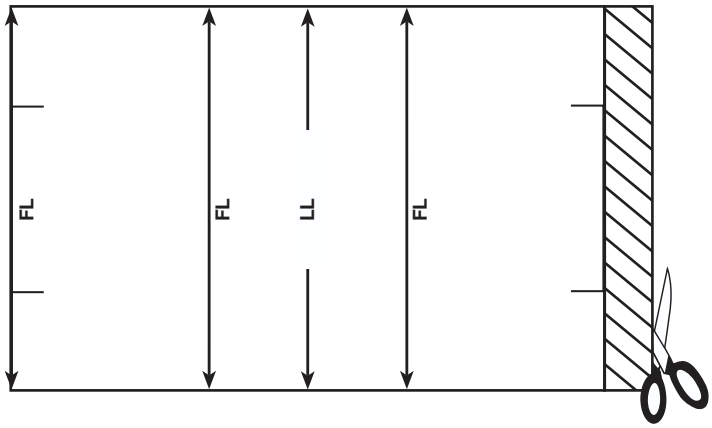

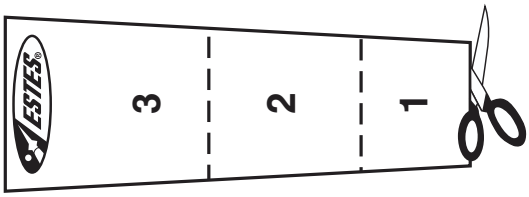

NOTE:
Make a copy if you want to keep instructions.

ASSEMBLE ENGINE MOUNT

1.

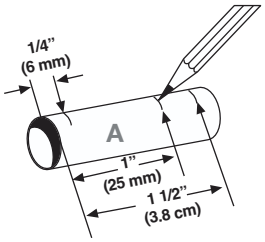

2.

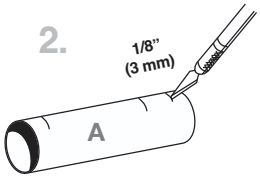

3.

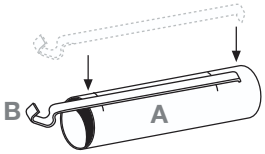

4.

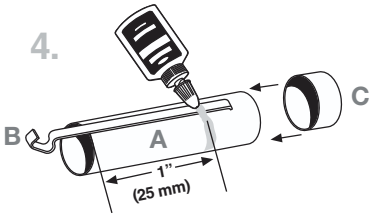

5. Apply glue to inside the end of the engine mount tube. Insert the engine block until it stops.

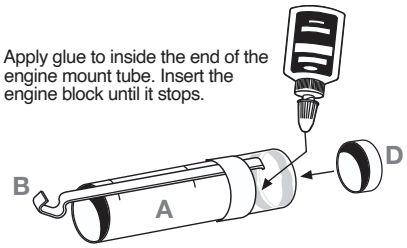

6.

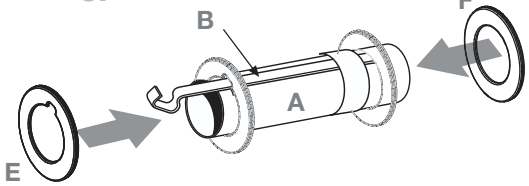

7.

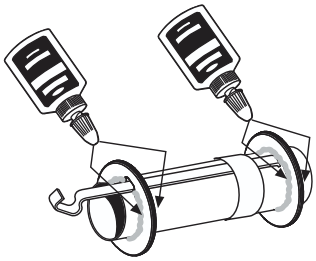

LET DRY

ATTACH FINS

1. Apply thin layer of glue to root edge of fin. Let dry 1 minute and apply another thin layer.

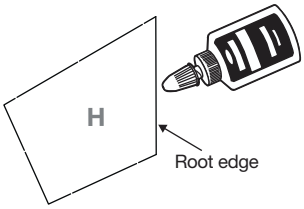

2. Carefully align fins to the fin lines marked on the body tube. Align the bottom of the root edge of the fin with the bottom of the body tube.

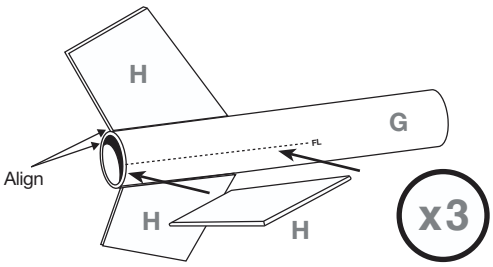

3. Check alignment.

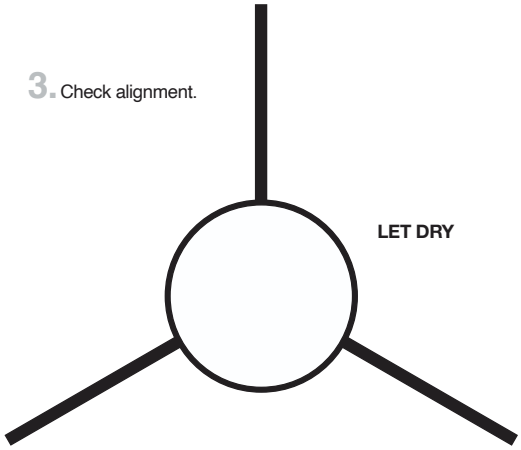

LET DRY

ATTACH LAUNCH LUG

1.

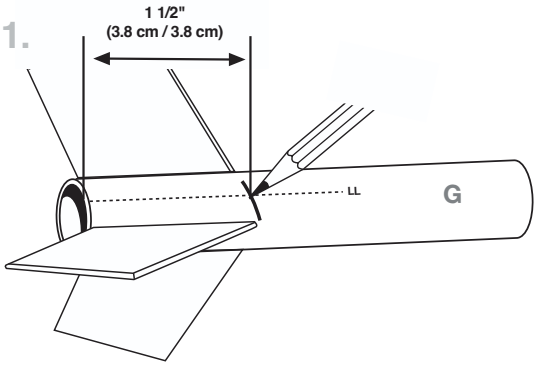

2.

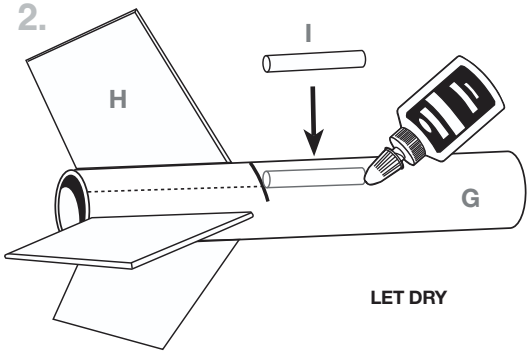

LET DRY

INSTALL ENGINE MOUNT

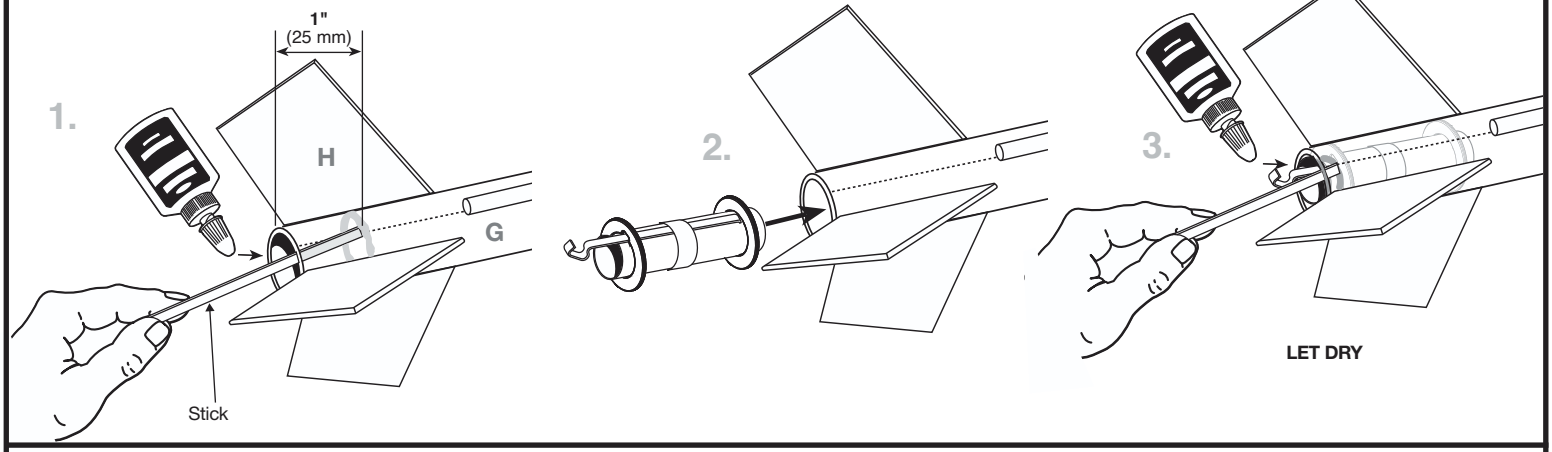

ASSEMBLE NOSE CONE

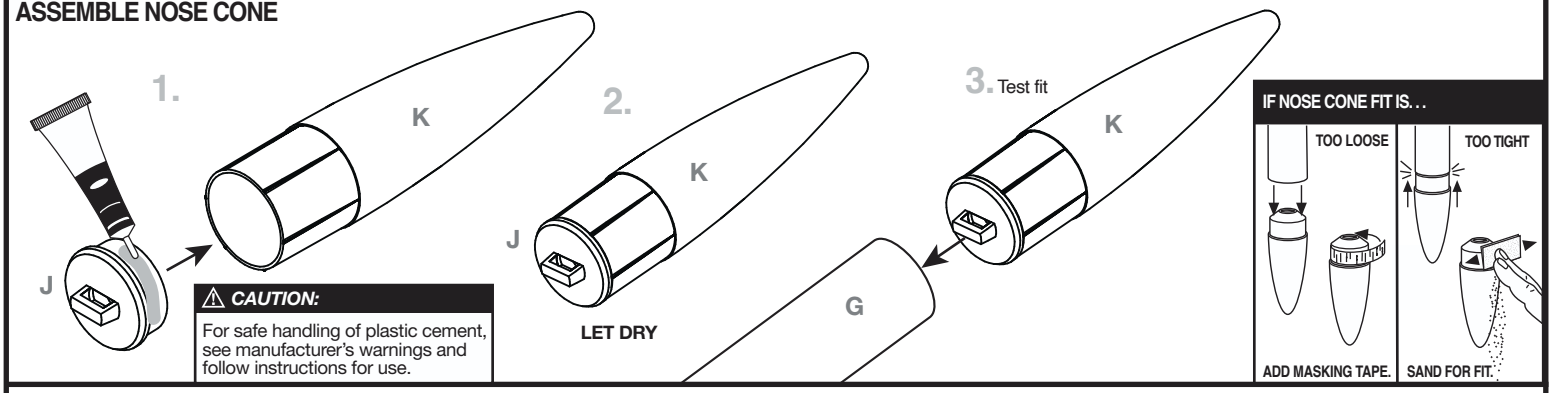

⚠ CAUTION:
For safe handling of plastic cement, see manufacturer's warnings and follow instructions for use.

INSTALL SHOCK CORD MOUNT AND RECOVERY SYSTEM

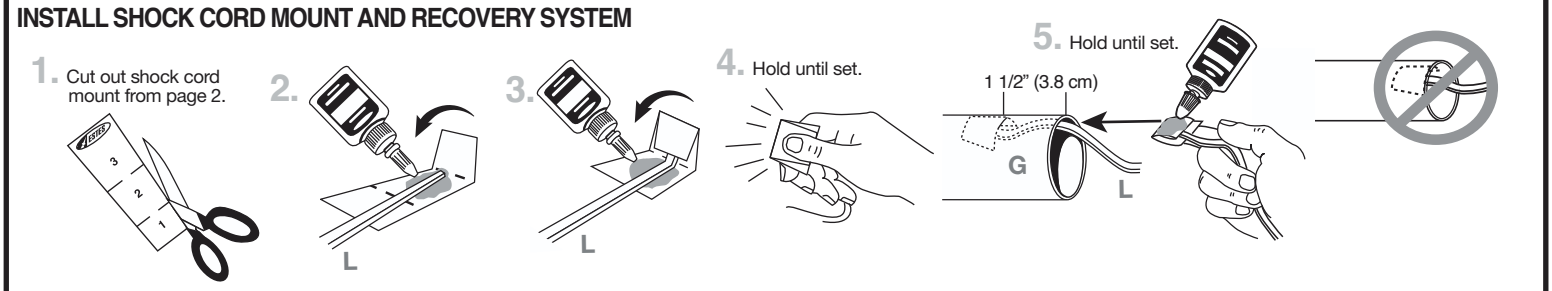

ROCKET FINISHING

Spray rocket with white primer, let dry & sand. Repeat until rocket is smooth, then paint. Apply decals after paint is dry.

1. Cut decals from sheet, trimming close to edge.
2. One at a time, place in warm water until decal curls and begins to relax.
3. Remove and position on rocket, sliding decal away from backing material.
4. Blot with clean paper towel. Let set overnight.
5. Optional: apply protective clear coat.

Please refer to packaging image for suggested paint scheme and/or decal placement.

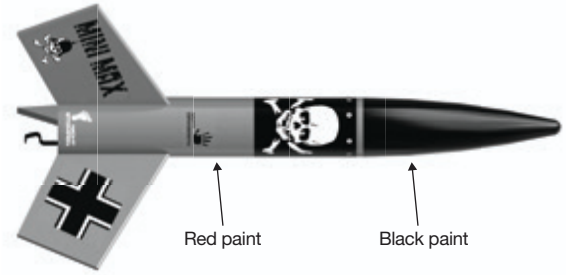

⚠ CAUTION:
See manufacturer's warnings and instructions before using spray finishing products.

PREPARE RECOVERY

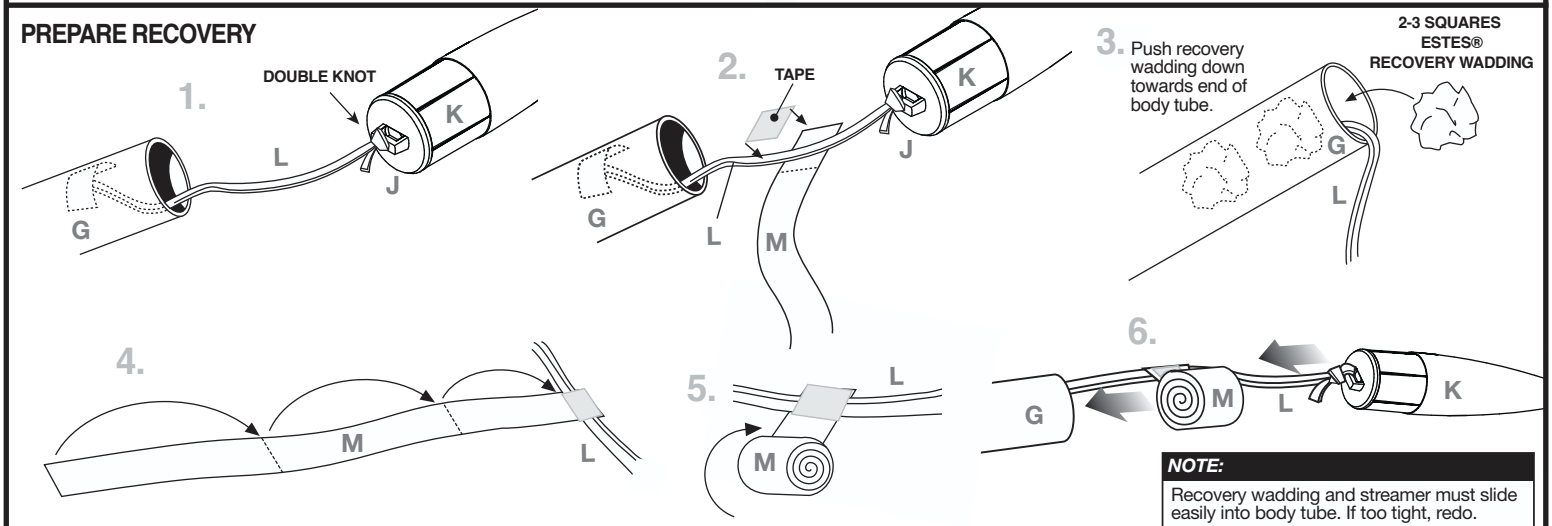

NOTE:
Recovery wadding and streamer must slide easily into body tube. If too tight, redo.

PREPARE ENGINE

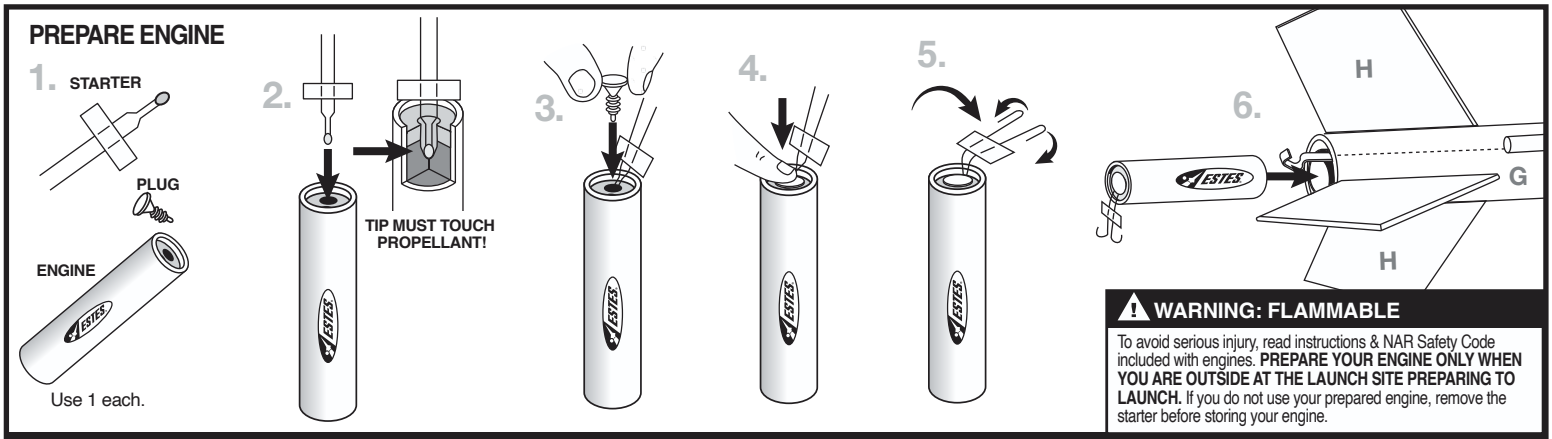

⚠ WARNING: FLAMMABLE

To avoid serious injury, read instructions & NAR Safety Code included with engines. **PREPARE YOUR ENGINE ONLY WHEN YOU ARE OUTSIDE AT THE LAUNCH SITE PREPARING TO LAUNCH.** If you do not use your prepared engine, remove the starter before storing your engine.

COUNTDOWN AND LAUNCH

NOTE:

Key always out until final countdown!

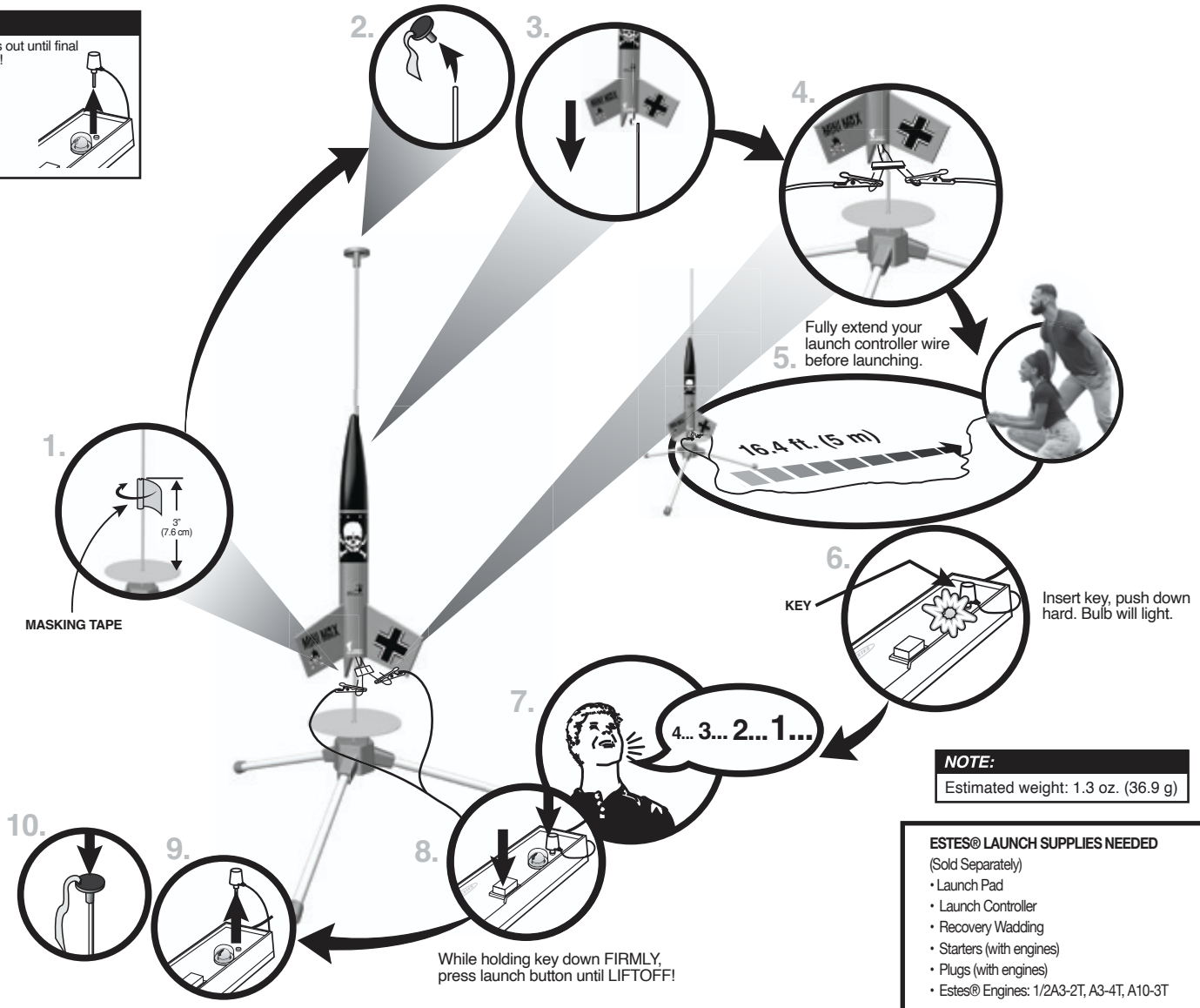

NOTE:

Estimated weight: 1.3 oz. (36.9 g)

ESTES® LAUNCH SUPPLIES NEEDED
(Sold Separately)

- Launch Pad
- Launch Controller
- Recovery Wadding
- Starters (with engines)
- Plugs (with engines)
- Estes® Engines: 1/2A3-2T, A3-4T, A10-3T

PRECAUTIONS

NAR SAFETY CODE

NO DRY GRASS OR WEEDS

PRE-LAUNCH CHECK For safety, never launch a damaged rocket. Check the rocket's body, nose cone and fins. Also, check the engine mount, recovery system and launch lug(s). Repair any damage before launching the rocket.
FLYING YOUR ROCKET Choose a large field (500 ft. [152 m] square) free of dry weeds and brown grass. The larger the launch area, the better your chance of recovering your rocket. Launch only with little or no wind and good visibility. Always follow the National Association of Rocketry (NAR) SAFETY CODE (enclosed).
MISFIRES TAKE THE KEY OUT OF THE CONTROLLER. WAIT ONE MINUTE BEFORE GOING NEAR THE ROCKET. Disconnect the micro-clips and remove the engine. Take the plug and starter out of the engine. A burned starter means the starter tip was not touching engine propellant. Install a new starter; be sure the tip is touching propellant inside the engine. Push the plug in place. Repeat steps under Countdown and Launch.

© 2024 Estes Industries, LLC • All Rights Reserved
Estes Industries, LLC • 1295 H Street, Penrose, CO 81240-9698 • Made in Guangdong, China
22 PAP
PN 090004-2445 (1-24)